ITEM	REQ'D.	DRAWING No.	PART No.	DESCRIPTION	ASSEMBLY BOARD 52-2453	ASSEMBLY MORTISE 52-2454	ASSEMBLY EXITS 52-2455
1	1	———	52-0172	ENCLOSURE BASE	✓	✓	✓
2	1	———	52-0173	ENCLOSURE LID	✓	✓	✓
3	1	———	52-2410	PROX CIRCUIT BOARD ASSEMBLY	✓	✓	✓
4	1	———	52-2409	LU CIRCUIT BOARD ASSEMBLY	✓	✓	✓
5	2	———	52-2436	BATTERY HOLDER ASSEMBLY	✓	✓	✓
6	4	———	01-4523	TAPPING SCREW	✓	✓	✓
7	4	———	01-4521	MACHINE SCREW	✓	✓	✓
8	1	52-0178 TAB	52-0185	BORED IDENTIFICATION LABEL (PA & PK)	✓		
			52-0186	MORTISE IDENTIFICATION LABEL (PA & PK)		✓	
			52-0187	EXITS IDENTIFICATION LABEL (PA & PK)			✓
9	1	———	01-0216	U. L. LABEL	✓	✓	✓
10	1	———	52-0253	BATTERY KEEPER	✓	✓	✓
11	1	———	52-0249	SET UP LABEL	✓	✓	✓

REVISION HISTORY				
ZONE	REV	DESCRIPTION	NAME/DATE	APPD/DATE
	A	ORG REL PER PCP00-608	—	—
D8, A8, C1	B	ITEM 10, 52-0253, ITEM 11, 52-0249; NOTE 8 & 9 ADDED PER PCP01-		

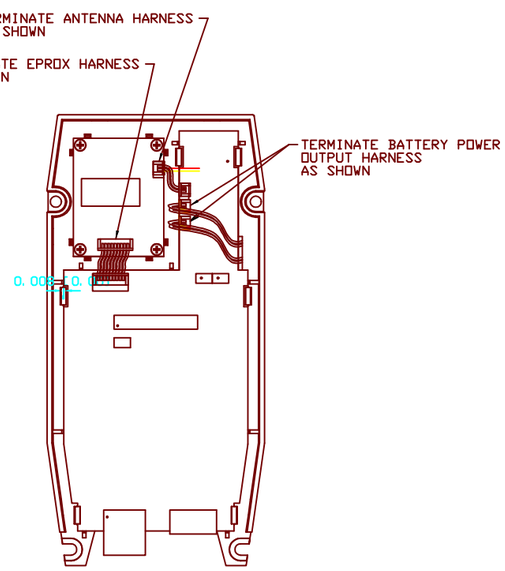

3-FRONT

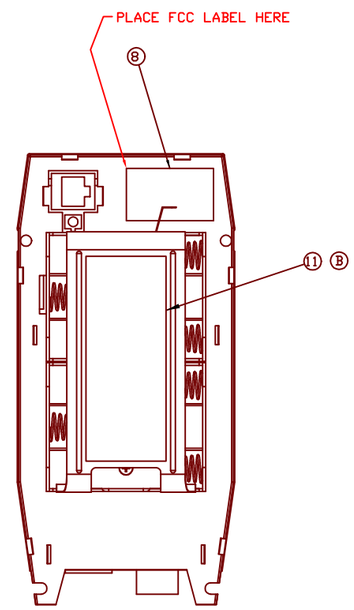

4-BACK

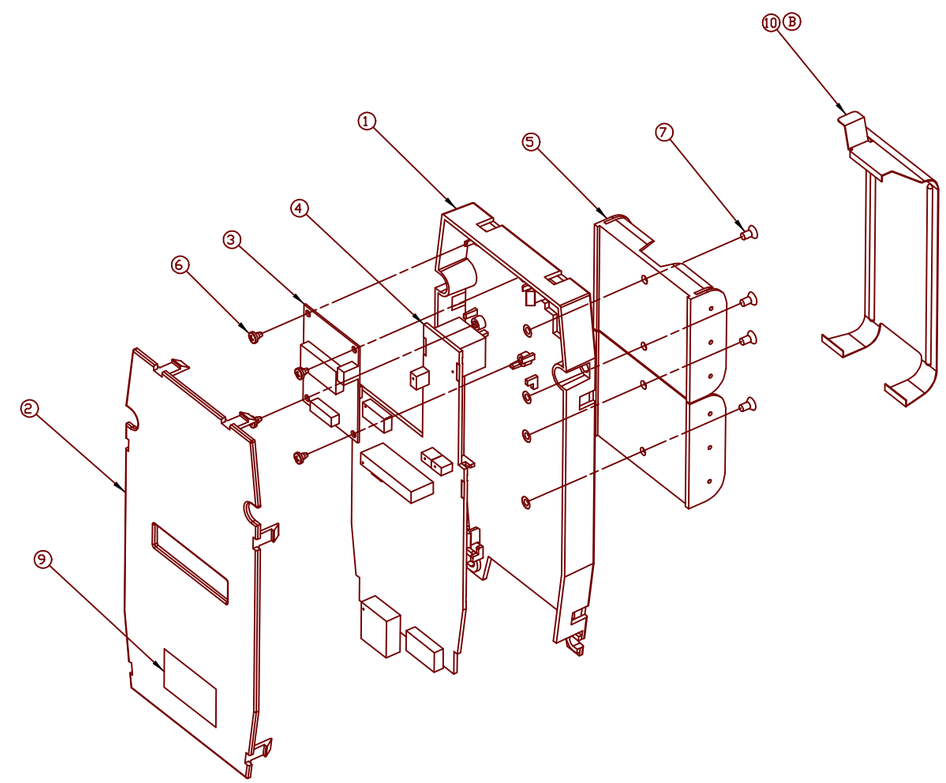

2-VIEW1

B ⑨ APPLY SET UP LABEL (ITEM 11) TO BATTERY KEEPER (ITEM 10) AS SHOWN.

⑧ APPLY IDENTIFICATION LABEL (ITEM 8) TO ENCLOSURE BASE (ITEM 1) AS SHOWN.

⑦ PROGRAM DOUBLE PULSE FOR PA8200 AND PK8200 ONLY.

⑥ REMOVE JUMPER TB7 FOR: PA8800, PK8800, PA8900 AND PK8900. JUMPER TB7 IN-PLACE FOR: PA10G77, PK10G77, PA8200, PK8200.

⑤ SEE APPROVED ENGINEERING SAMPLE FOR ASSEMBLY.

④ THE ENCLOSURE LID (ITEM 2) SNAPS ONTO THE ENCLOSURE BASE (ITEM 1) IN SIX PLACES.

③ THE BATTERY HOLDER ASSEMBLIES (2 REQ'D.) (ITEM 5) ARE PLACED ONTO THE ENCLOSURE BASE (ITEM 1) AND HELD SECURELY WITH 4 MACHINE SCREWS (ITEM 7).

② THE LU CIRCUIT BOARD ASSEMBLY (ITEM 4) SNAPS INTO THE ENCLOSURE BASE (ITEM 1) IN SIX PLACES.

① THE PROX CIRCUIT BOARD ASSEMBLY (ITEM 3) IS TO BE PLACED ONTO THE ENCLOSURE BASE (ITEM 1) AND HELD SECURELY WITH 4 TAPPING SCREWS (ITEM 6).

INTERPRET DIM AND TOL PER ASME Y14.5M - 1994
UNLESS OTHERWISE SPECIFIED
DIMENSIONS ARE IN INCHES
TOLERANCE .XX±.01 .XXX±.005
ANGLES ±1°
FRACTIONS ±1/64

CONFIDENTIAL
THIS DOCUMENT IS THE CONFIDENTIAL PROPERTY OF SARGENT MANUFACTURING AND IS NOT TO BE REPRODUCED, USED OR DISCLOSED BY ANYONE WITHOUT THE EXPRESS WRITTEN PERMISSION OF SARGENT MANUFACTURING COMPANY.

DRAWN BY/DATE	FRM 12/22/00
CHECKED BY/DATE	PN 12/22/00
PROCESS ENG/DATE	RCC 12/22/00
FNL APPROVAL/DATE	RSS 12/23/00
PROD CTRL/FNL REL	NAM 1/12/01

SARGENT Manufacturing Company
100 Sargent Drive New Haven, CT 06511

ART. LOW PROFILE ESCUTCHEON

TITLE: PA & PK ENCLOSURE ASSEMBLY

SIZE D | DWG No. 52-2452 TAB | REV

SCALE: 1:1 | SHEET: 1 OF 1

52-2453 THRU 52-2455