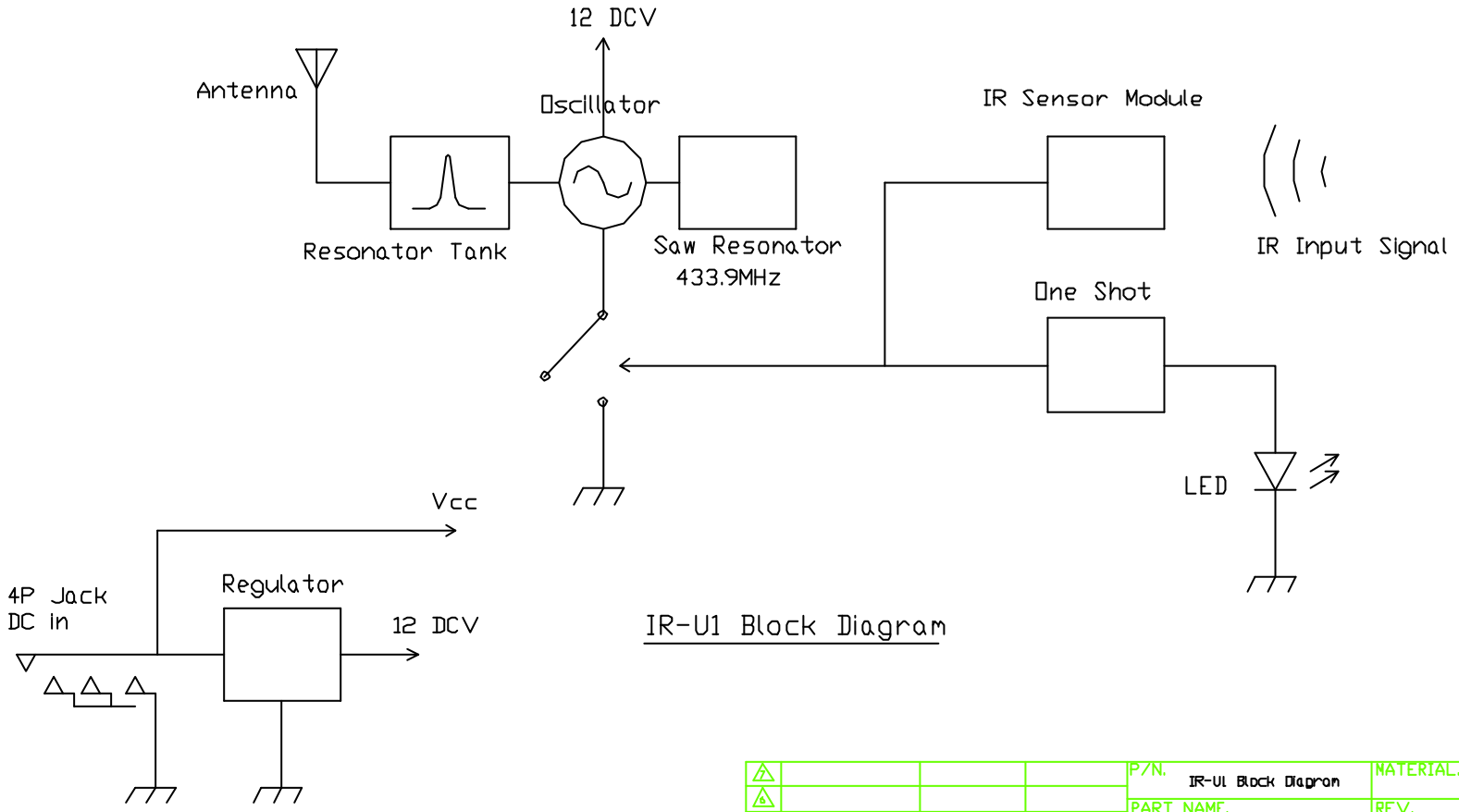

IR-U1 Block Diagram

7			
6			
5			
4			
3			
2			
1			
ISSUE	New issue	2001-6-12	
	ECN NO.	DATE	AMEND BY

P/N. IR-U1 Block Diagram			MATERIAL.
PART NAME. IR RCE User Unit			REV. 1.01
MODEL. IR-U1			FINISH.
APPV'D BY dKu	CHECKED BY	CHECKED BY	DRAWN BY Ton
DRAWING NO. IR200-U1-BLK		QTY PCS / PAGE OF	DIMENSION mm
Pro Broadband (SZ) Inc.			