FCC/Dolby Label
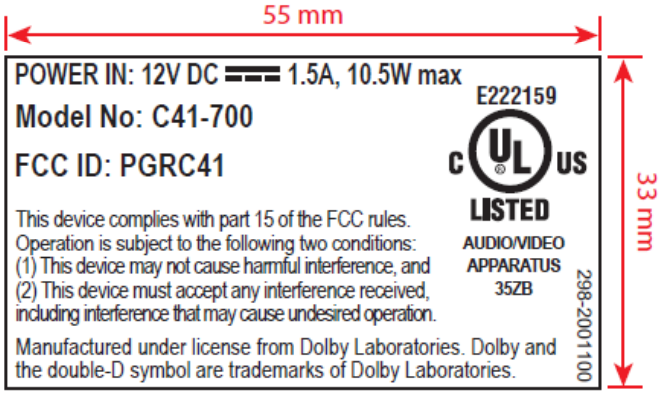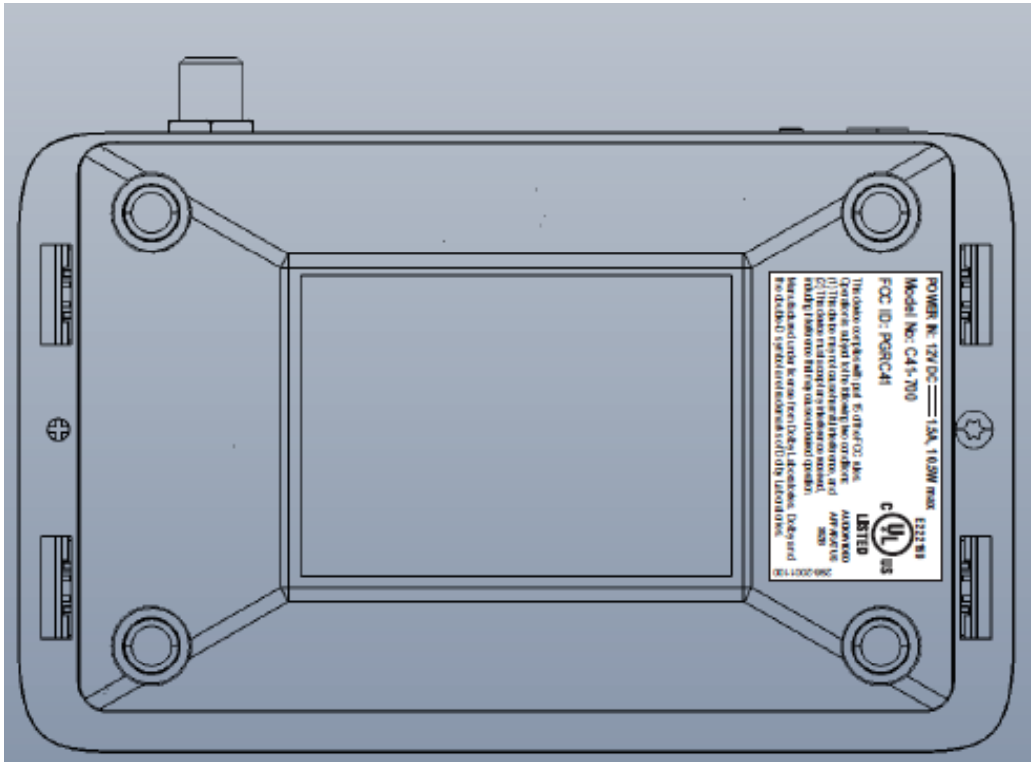
[Pace P/N 298-2001100]