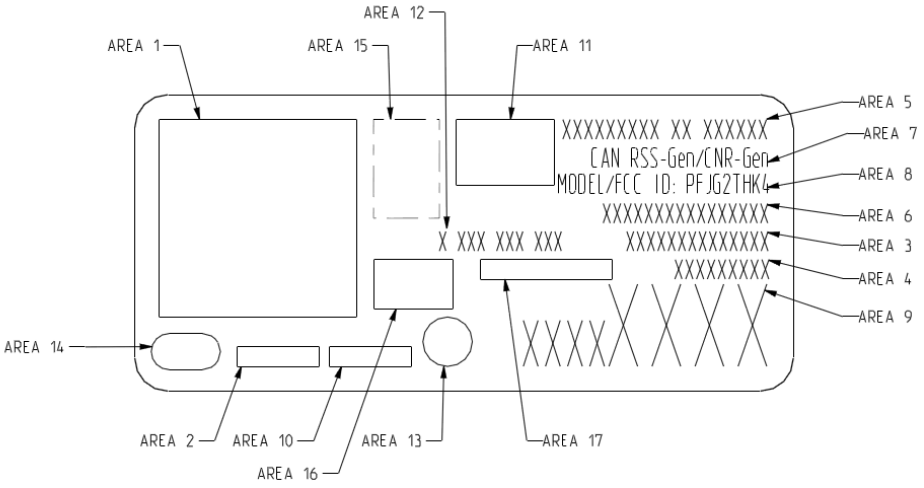

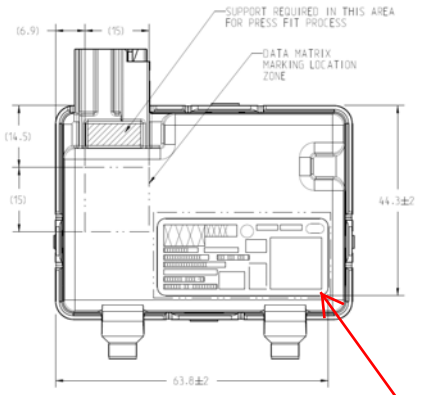

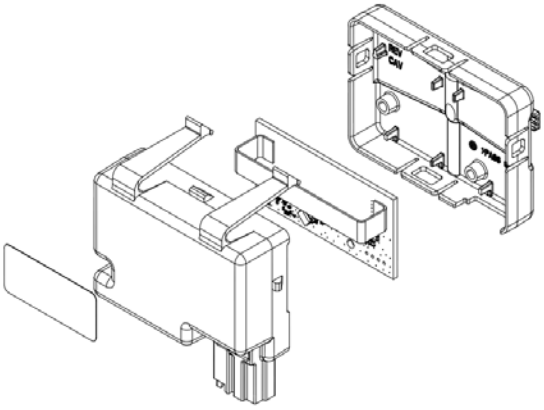

LABEL LOCATION