5 Device Diagram

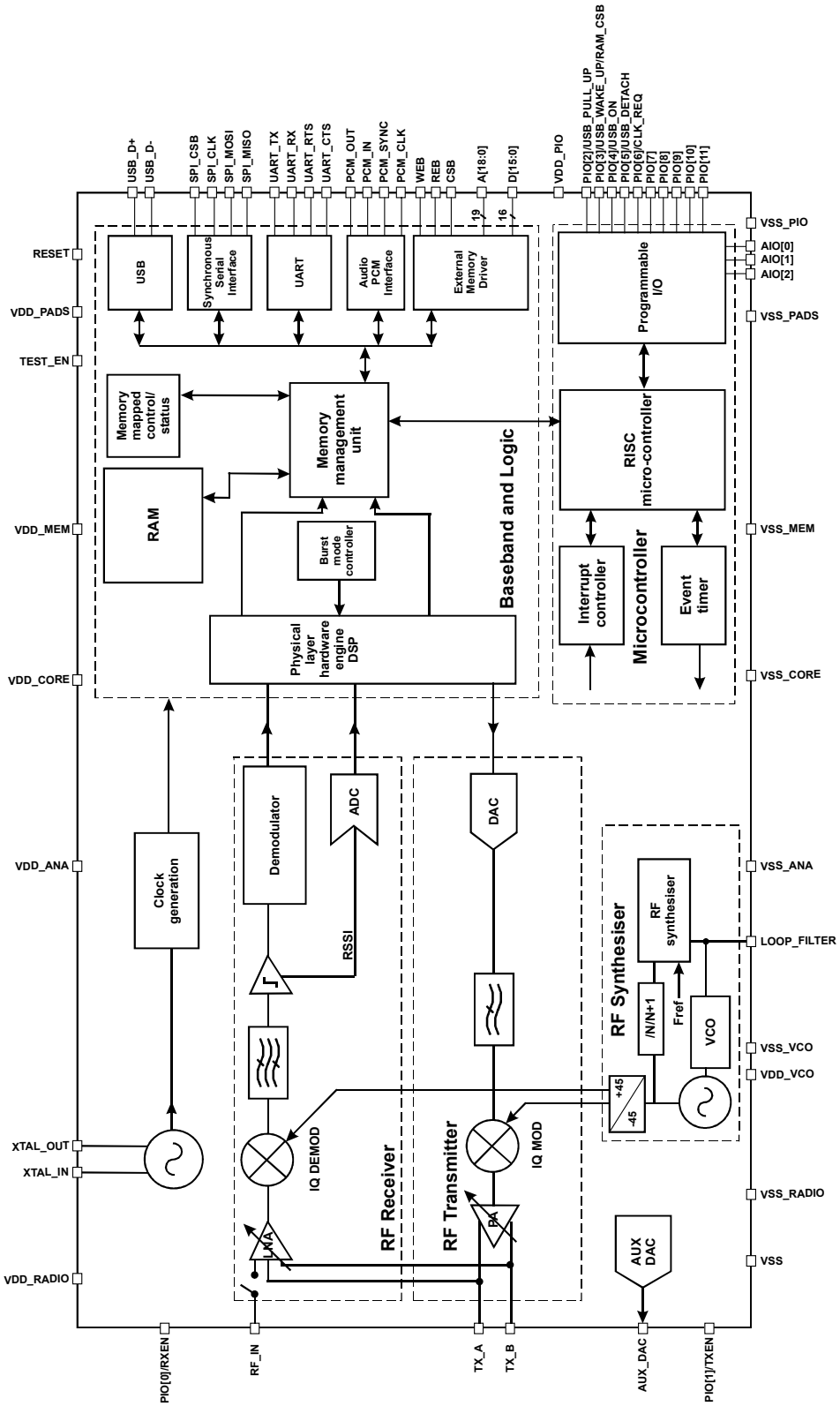

Figure 5.1: BlueCore2-External Device Diagram