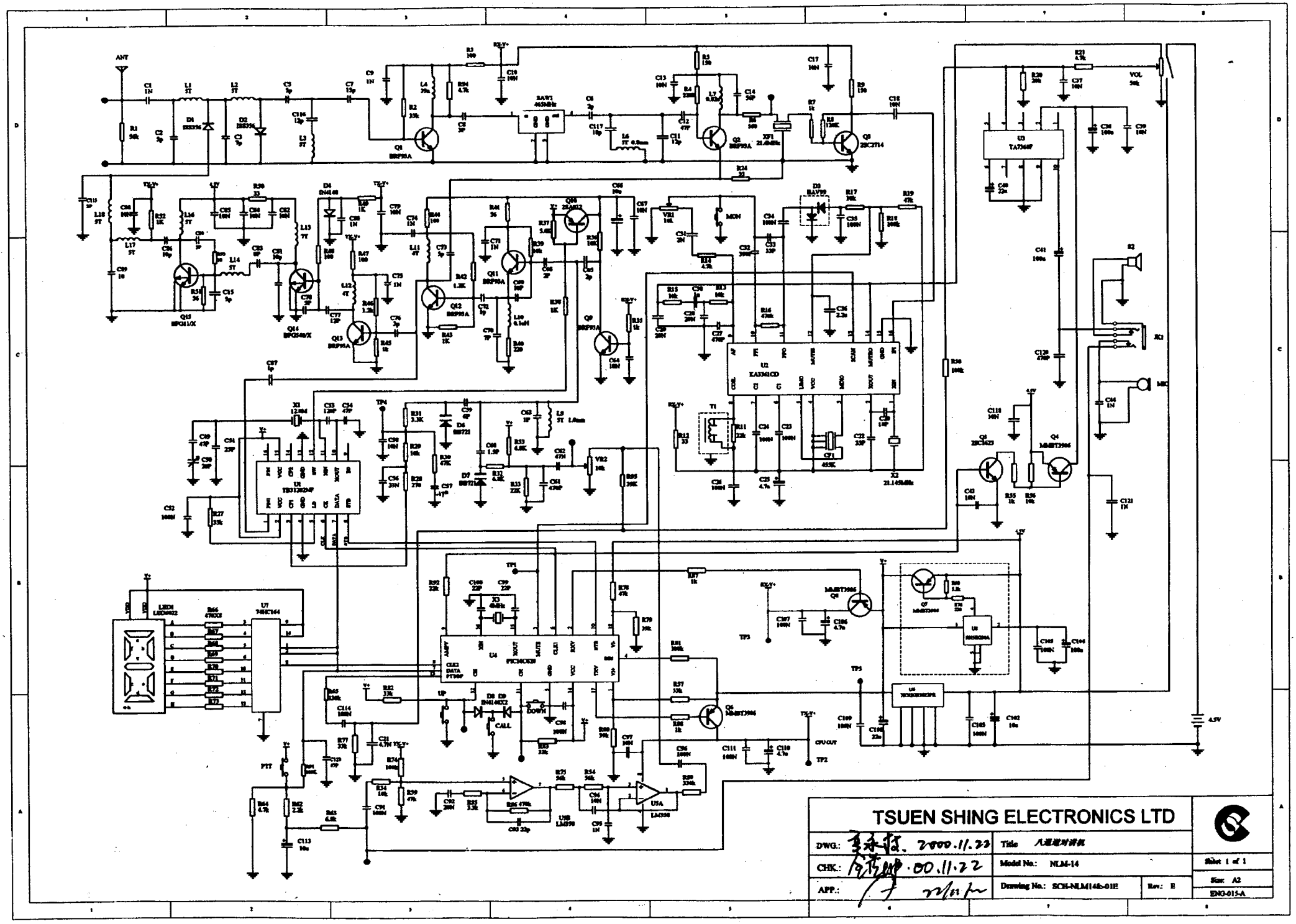
TSUEN SHING ELECTRONICS LTD
DWG.:
CHK.:
APP.:
Title
Model No.: NLM-14
Drawing No.: SCR-NLM14b-01E
Rev.: E
Sheet 1 of 1
Size: A2
ENG-015-A