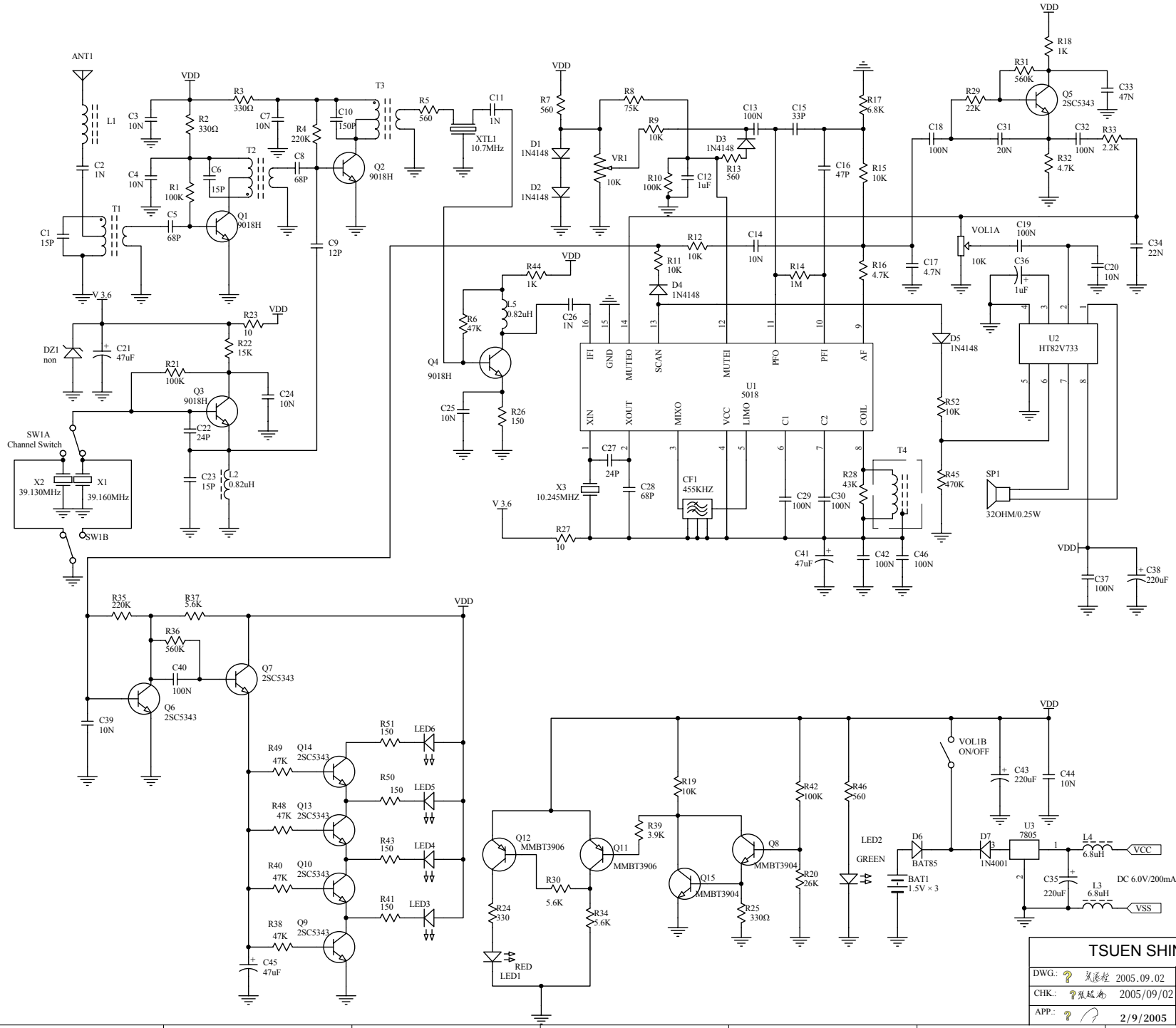

NOTE:

REV:	A	首次发行
NAME:	ZHCHANG	
DATE:	2005.09.01	
REV:		
NAME:		
DATE:		
REV:		
NAME:		
DATE:		
REV:		
NAME:		
DATE:		
REV:		
NAME:		
DATE:		
REV:		
NAME:		
DATE:		
REV:		
NAME:		
DATE:		
REV:		
NAME:		
DATE:		
REV:		
NAME:		
DATE:		
REV:		
NAME:		
DATE:		

TSUEN SHING ELECTRONICS LTD			
DWG.: 张孟雄 2005.09.02	Title *BABY PHONE(RX)*		Sheet 1 of 1
CHK.: 张超海 2005/09/02	Model No.: DBM1001RX		Size: A3
APP.: 2/9/2005	Drawing No.: SCH-DBM1001-01A	Rev.: A	ENG-015-B