NO.	REVISIONS	DATE:	CHK:	APP:
		17/12		
		17/12		

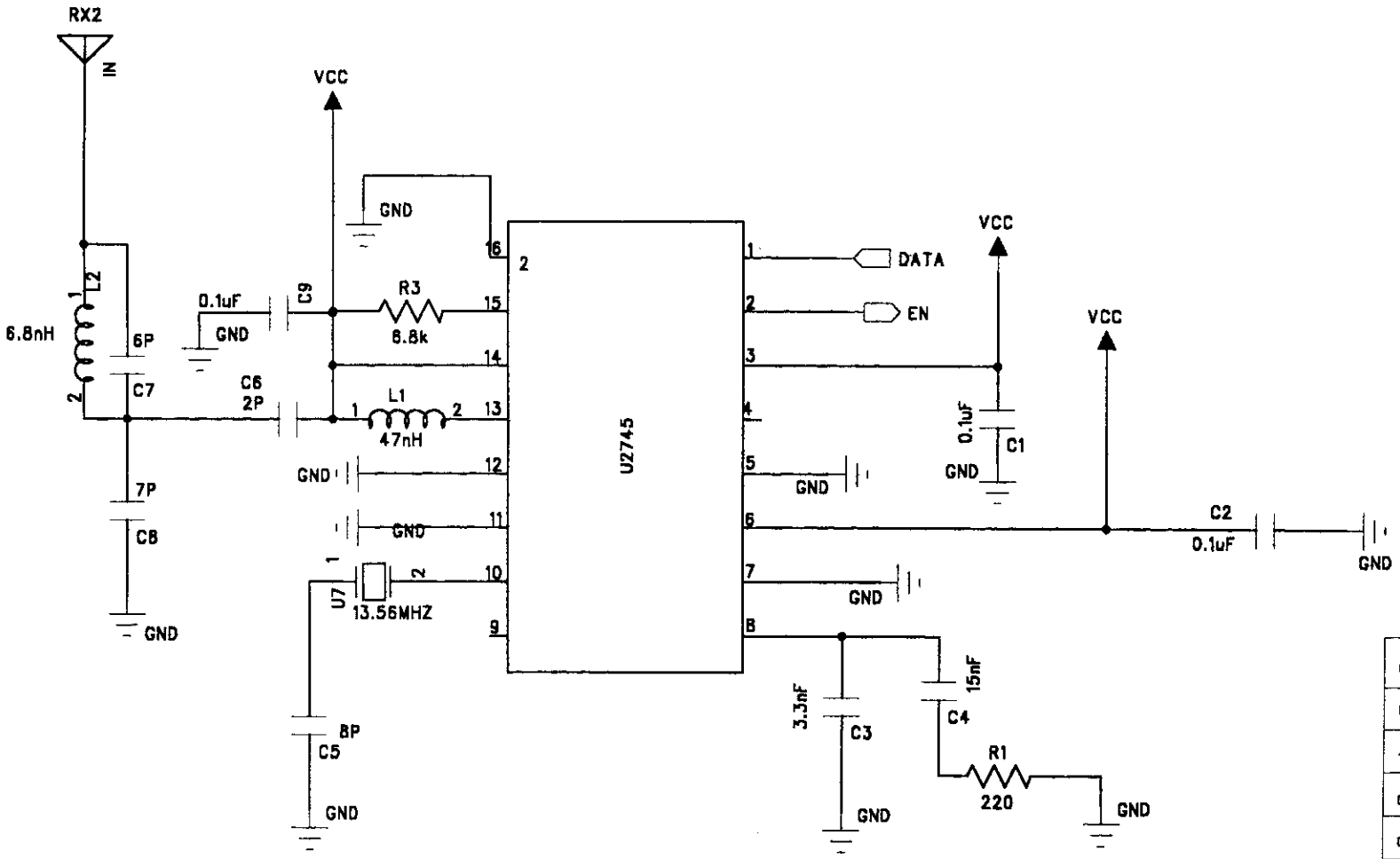

COMPANY:	Electronics Tomorrow		
DWG NUM:	7070E00231	REV:	T6.0
TITLE:	SCH	MODEL:	7070
DRN./DATE:	WJ 12/4.01	FILE:	70701
CHK./DATE:		IC:	2758
APP./DATE:		LCD:	
☐ TO FILE ☐ REL		SHEET OF:	

NO.	REVISIONS	DATE:	CHK:	APP:

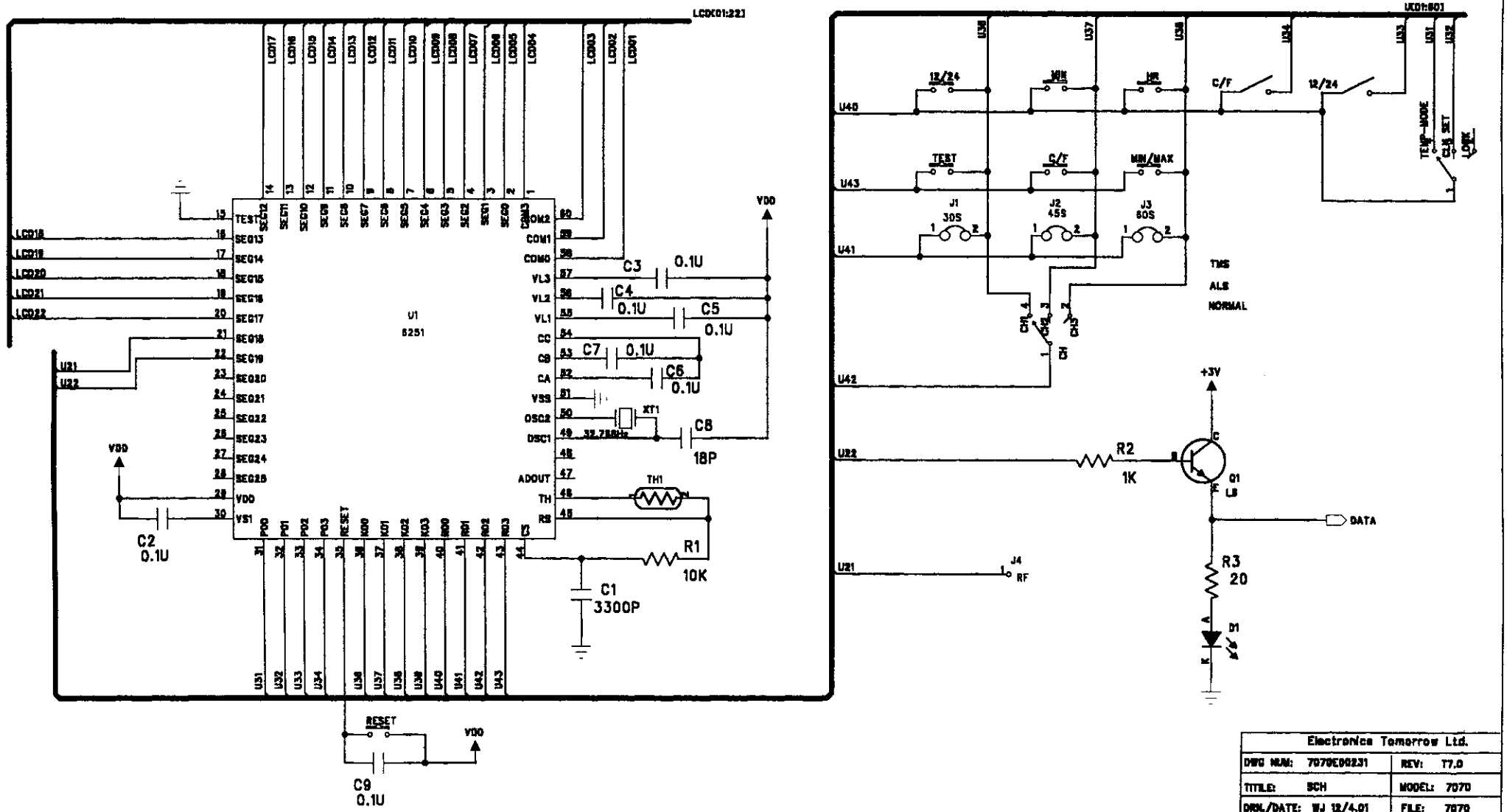

Electronics Tomorrow Ltd.	
DWG NUM: 7070E00231	REV: T7.0
TITLE: SCH	MODEL: 7070
DRN./DATE: WJ 12/4.01	FILE: 7070
CHK./DATE:	IC: 8251D07E
APP. /DATE:	LCD: 81-40848-110A0
☐ TO FILE ☐ REL	SHEET OF: