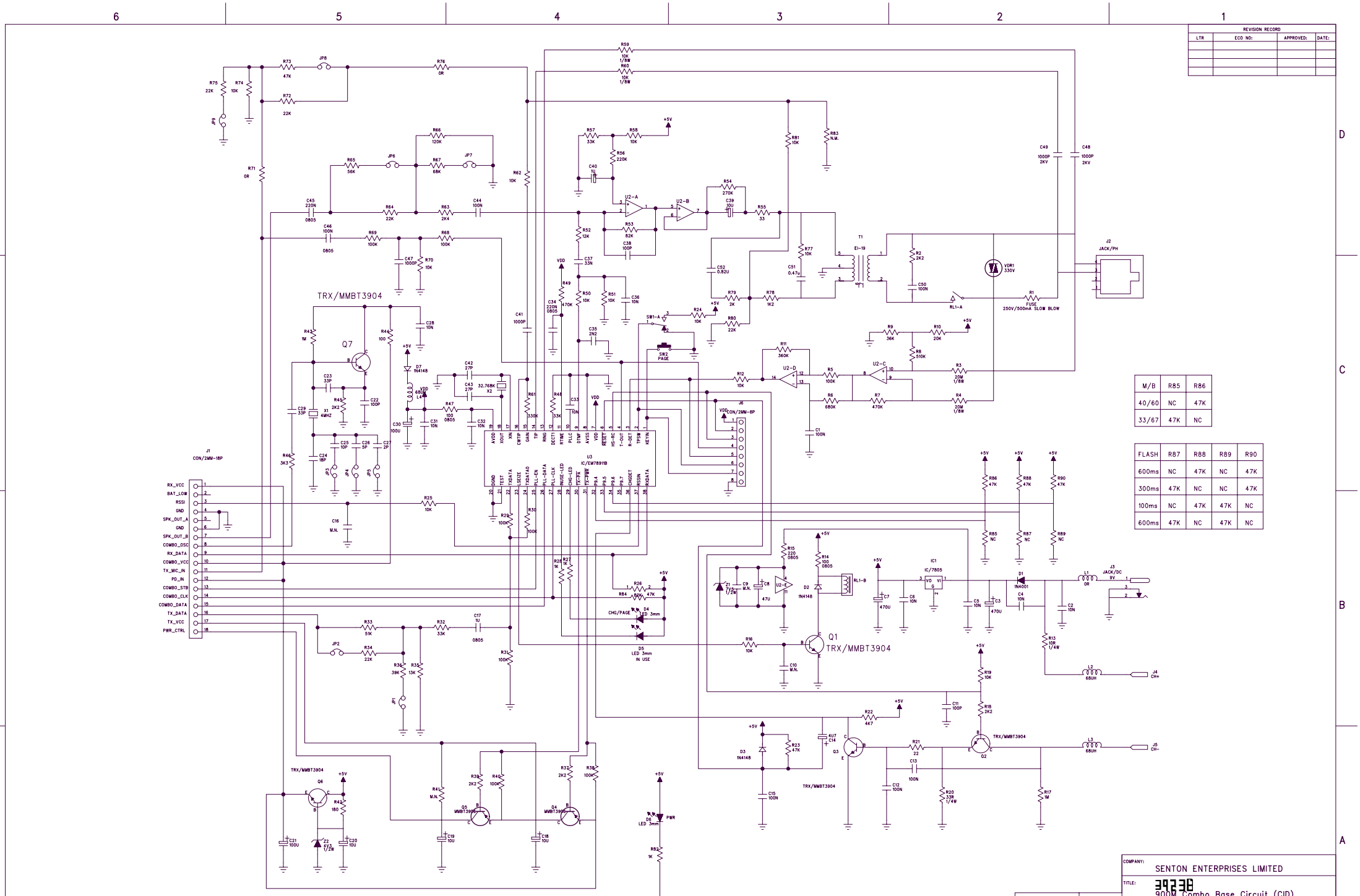

REVISION RECORD			
LTR	ECO NO:	APPROVED:	DATE:

M/B	R85	R86
40/60	NC	47K
33/67	47K	NC

FLASH	R87	R88	R89	R90
600ms	NC	47K	NC	47K
300ms	47K	NC	NC	47K
100ms	NC	47K	47K	NC
600ms	47K	NC	47K	NC

COMPANY: SENTON ENTERPRISES LIMITED			
TITLE: 39236 900M Combo Base Circuit (CID)			
CODE:	SIZE: A1	DRAWING NO: 208BM-01.SCH	REV: 01
SCALE:		SHEET: 1 OF 1	

DRAWN: Fung	DATED: 22-10-2001	
CHECKED:	DATED:	
QUALITY CONTROL:	DATED:	
RELEASED:	DATED:	

REVISION RECORD			
LTR	ECO NO:	APPROVED:	DATE:

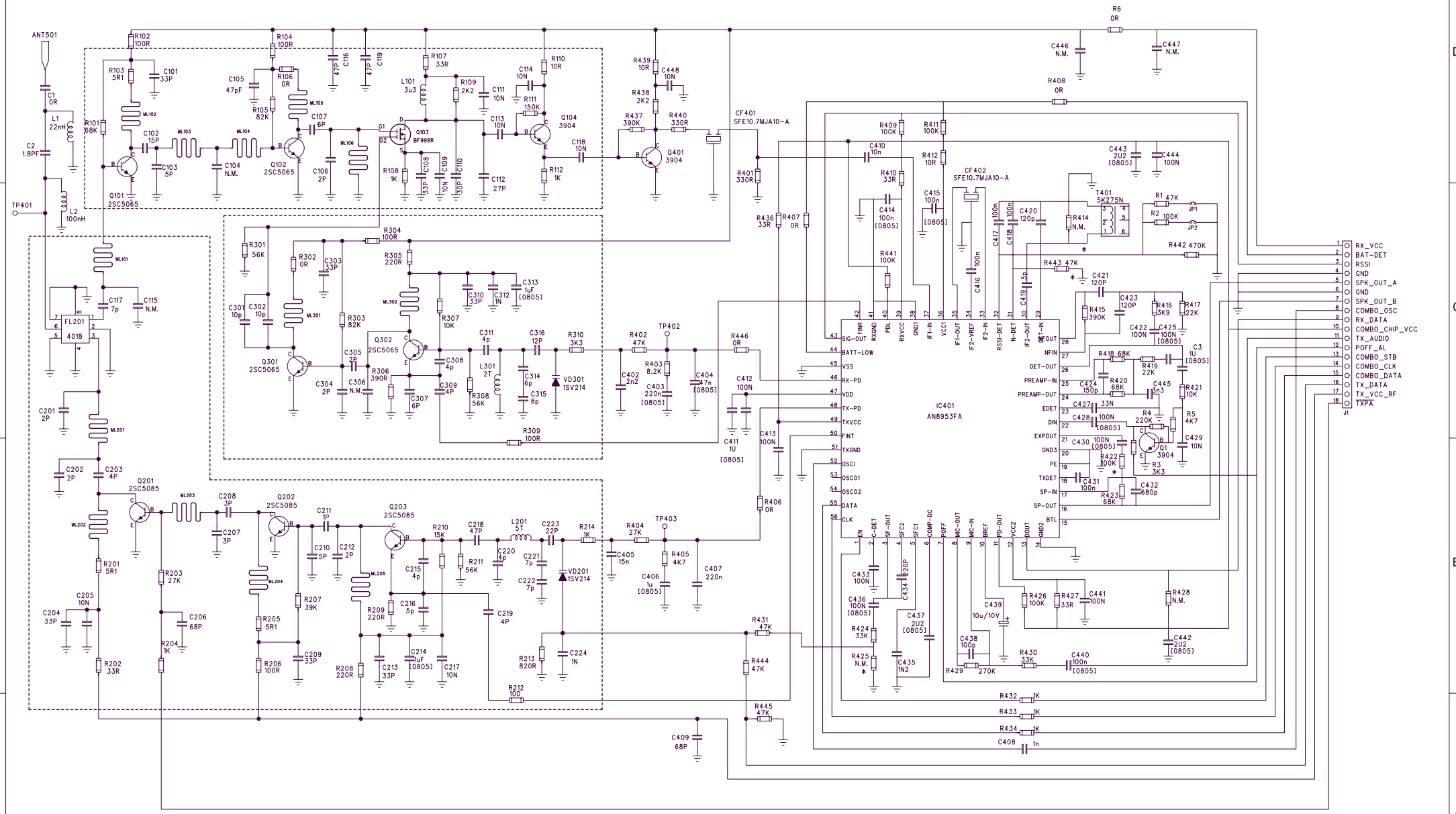

DRAWN: FUNG	DATED: 20-10-2001	COMPANY: SENTON ENTERPRISES LIMITED	
CHECKED:	DATED:	TITLE: 39238 900MHz COMBO MODULE B/S	
QUALITY CONTROL:	DATED:	CODE:	SIZE:
RELEASED:	DATED:	DRAWING NO: 208BR-01.SCH	REV: 01
		SCALE:	SHEET: 1 OF 1

REVISION RECORD			
LTR	ECO NO:	APPROVED:	DATE:

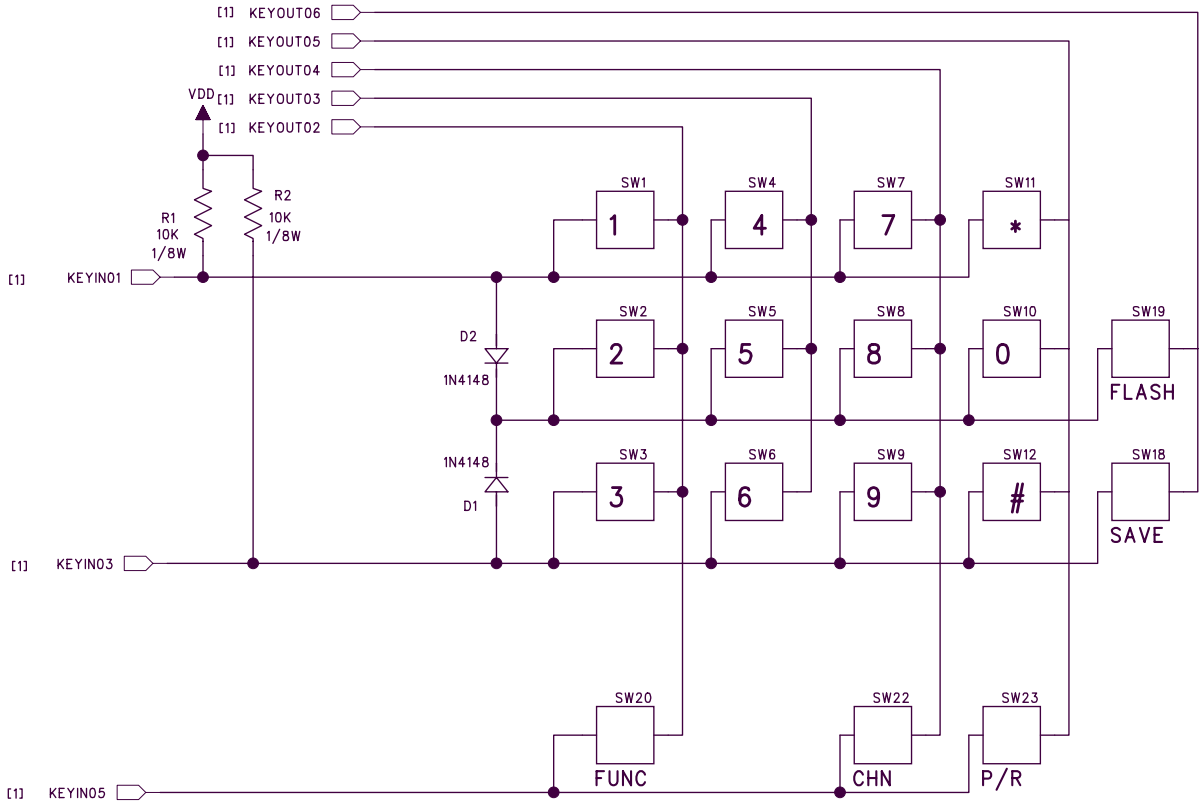

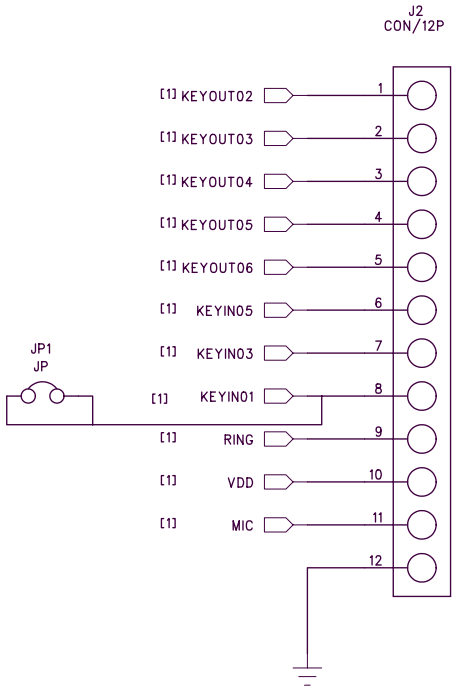

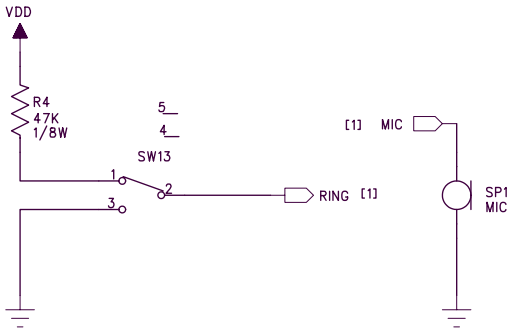

DRAWN: Fung	DATED: 22-10-2001		
CHECKED:	DATED:		
QUALITY CONTROL:	DATED:		
RELEASED:	DATED:		

COMPANY: SENTON ENTERPRISES LIMITED

TITLE: 3923B KEYBOARD

CODE:	SIZE:	DRAWING NO:	REV:
	A3	208HK-01.SCH	01

SCALE:

SHEET: 1 OF 1

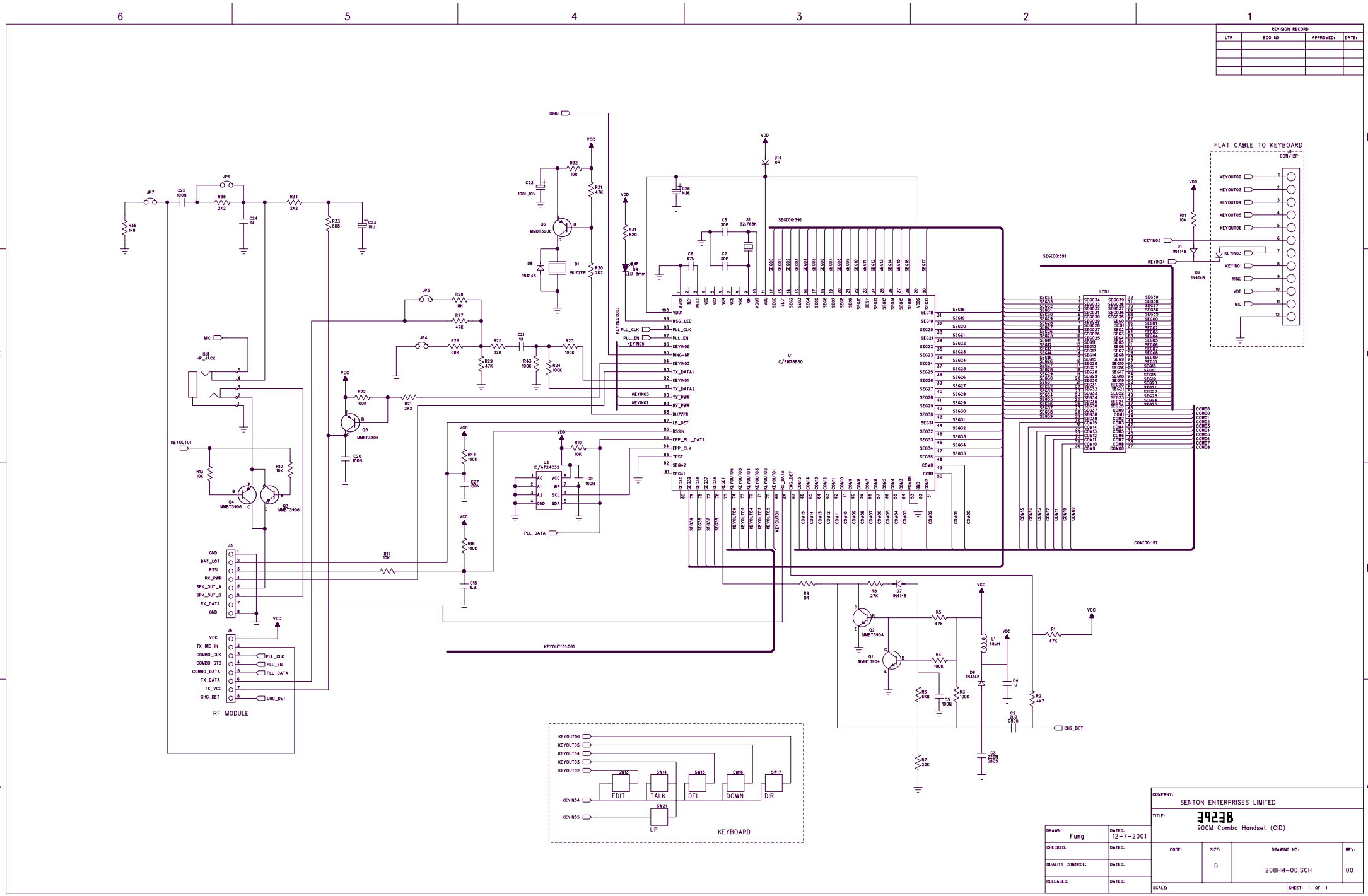
REVISION RECORD
LTR
ECO NO:
APPROVED:
DATE:
FLAT CABLE TO KEYBOARD
CON/12P
KEYOUT02
KEYOUT03
KEYOUT04
KEYOUT05
KEYOUT06
KEYIN05
KEYIN04
KEYIN03
KEYIN01
RING
VDD
MIC
U1
IC/EM78860
LCD1
SEG[00:39]
COM[00:15]
KEYOUT[01:06]
U2
IC/AT24C32
PLL_DATA
PLL_CLK
PLL_EN
CHG_DET
J3
GND
BAT_LOT
RSSI
RX_PWR
SPK_OUT_A
SPK_OUT_B
RX_DATA
J5
VCC
TX_MIC_IN
COMBO_CLK
COMBO_STB
COMBO_DATA
TX_DATA
TX_VCC
RF MODULE
EDIT
TALK
DEL
DOWN
DIR
UP
KEYBOARD
COMPANY:
SENTON ENTERPRISES LIMITED
TITLE:
39238
900M Combo Handset (CID)
DRAWN:
Fung
DATED:
12-7-2001
CHECKED:
QUALITY CONTROL:
RELEASED:
CODE:
SIZE:
D
DRAWING NO:
208HM-00.SCH
REV:
00
SCALE:
SHEET: 1 OF 1

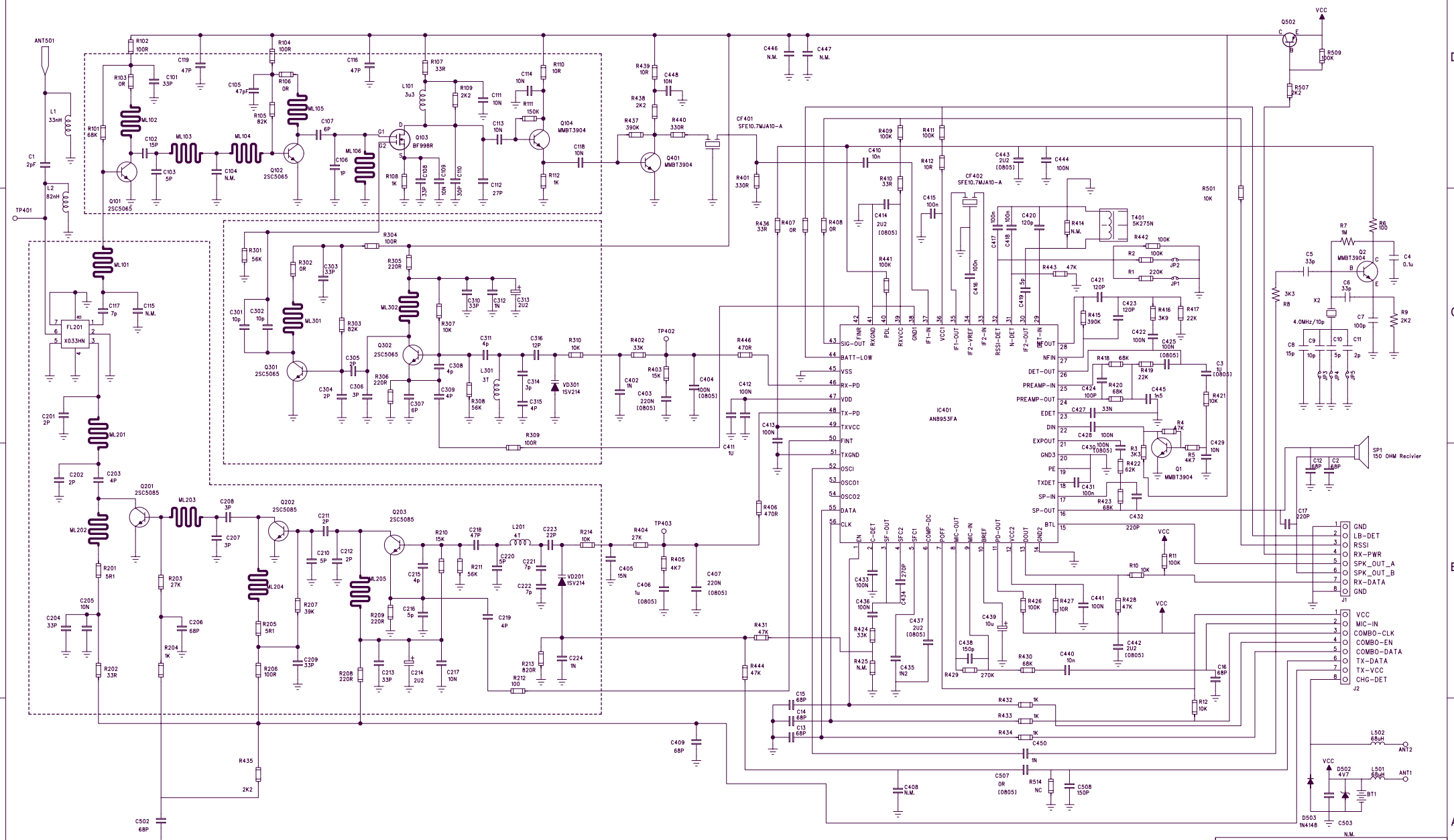

REVISION RECORD			
LTR	ECO NO:	APPROVED:	DATE:

DRAWN: FUNG	DATED: 12-7-2001	COMPANY: SENTON Enterprices Ltd.	
CHECKED:	DATED:	TITLE: 39238 900MHz COMBO MODULE H/S	
QUALITY CONTROL:	DATED:	CODE:	SIZE: A1
RELEASED:	DATED:	DRAWING NO: 208HR-00.SCH	REV: 1.0
		SCALE:	SHEET: 1 OF 1

REVISION RECORD			
LTR	ECO NO:	APPROVED:	DATE:

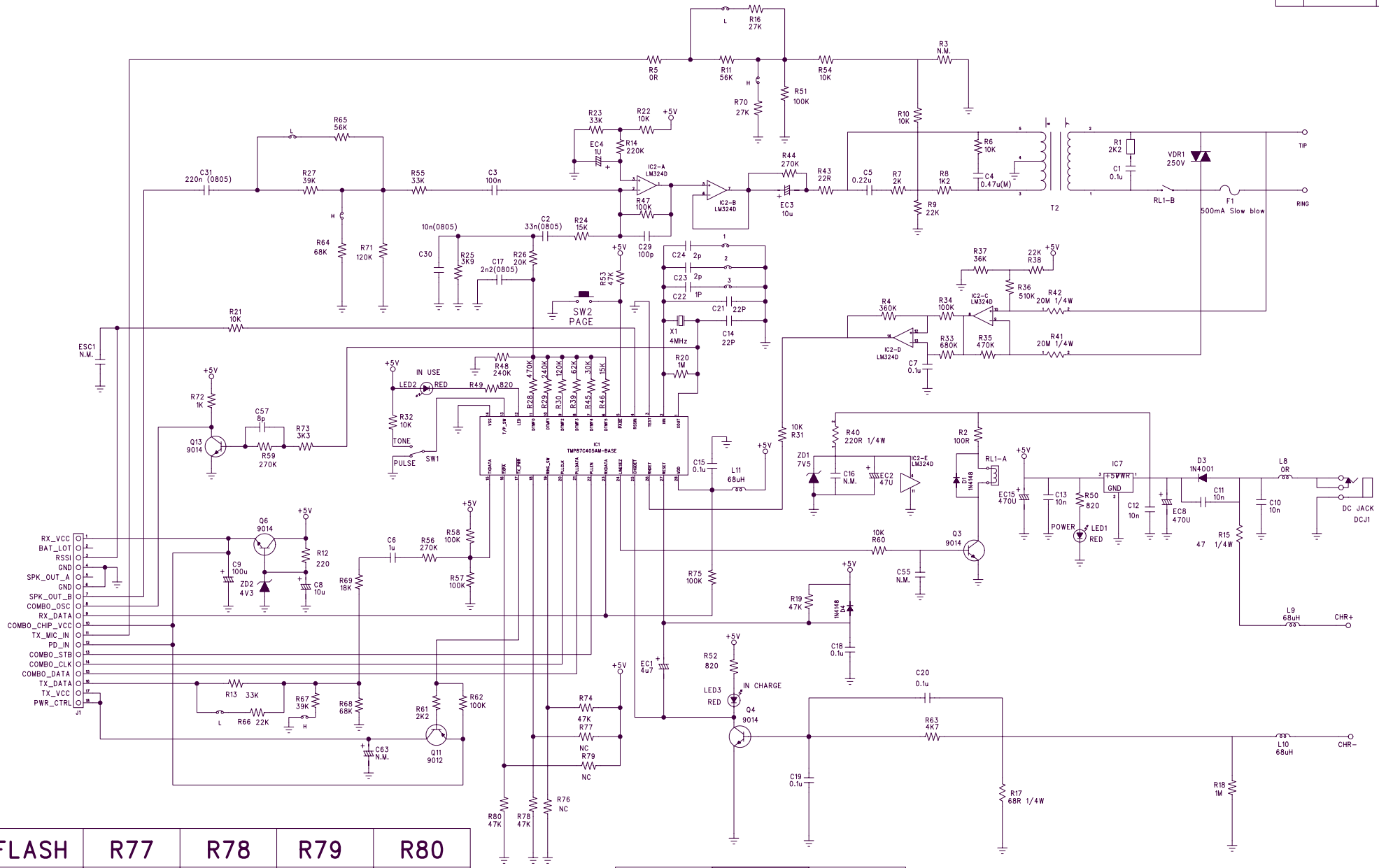

FLASH	R77	R78	R79	R80
600ms	NC	47K	NC	47K
300ms	NC	47K	47K	NC
100ms	47K	NC	NC	47K

M/B	R74	R76
33/67	NC	47K
40/60	47K	NC

DRAWN: FUNG	DATED: 17-7-01	COMPANY: SENTON ENTERPRISES LIMITED	
CHECKED:	DATED:	TITLE: 39233 900M Combo Base Circuit (Basic)	
QUALITY CONTROL:	DATED:	CODE:	SIZE: A1 / DRAWING NO: 202BM-03.SCH / REV: 03
RELEASED:	DATED:	SCALE:	SHEET: 1 OF 1

REVISION RECORD			
LTR	ECO NO:	APPROVED:	DATE:

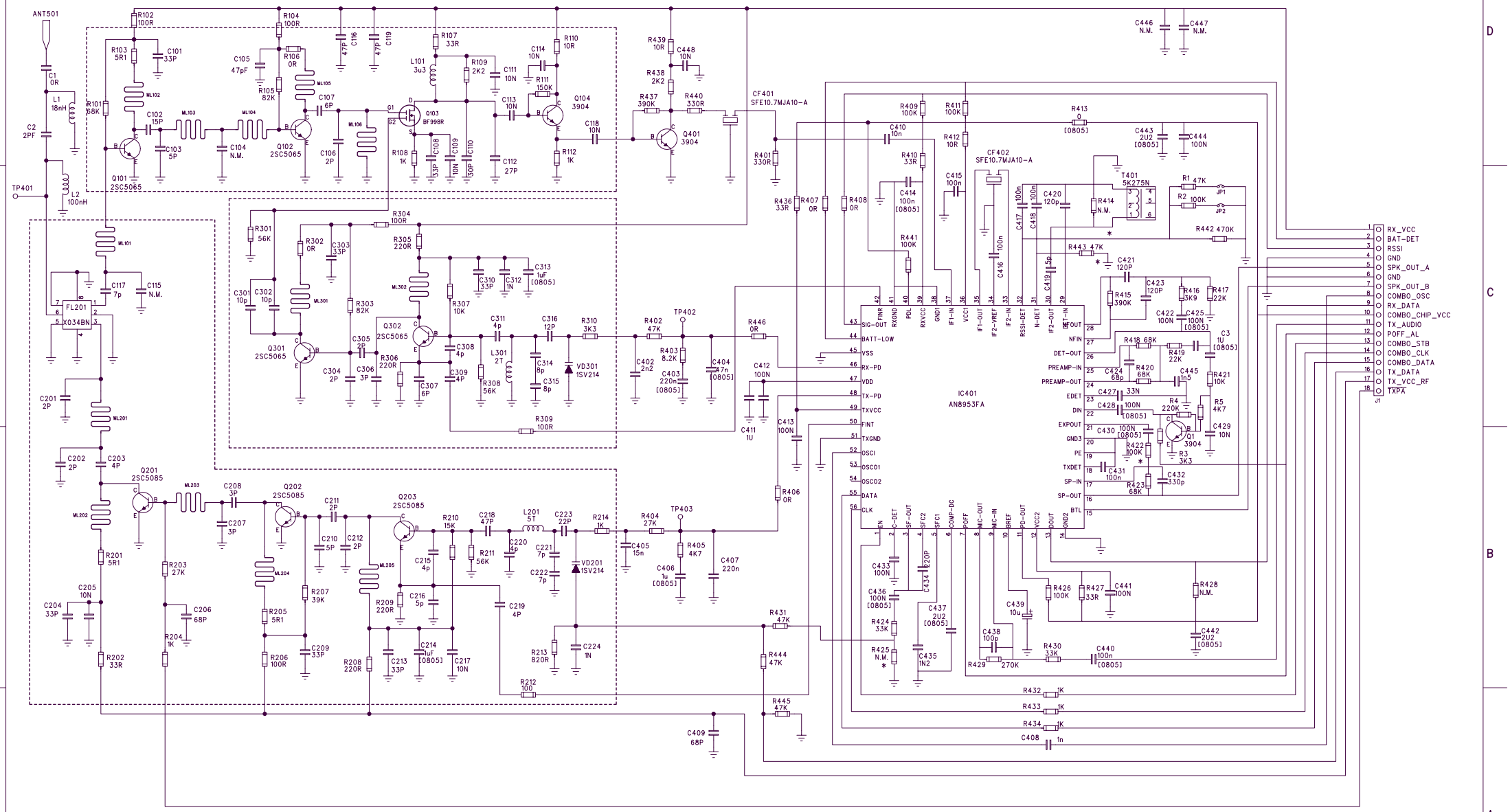

DRAWN: FUNG	DATED: 2-8-2001	COMPANY: SENTON ENTERPRISES LIMITED	
CHECKED:	DATED:	TITLE: 39233 900MHz COMBO MODULE B/S	
QUALITY CONTROL:	DATED:	CODE:	SIZE:
RELEASED:	DATED:	DRAWING NO: 202BR-03.SCH	REV: 03
		SCALE:	SHEET: 1 OF 1

REVISION RECORD			
LTR	ECO NO:	APPROVED:	DATE:

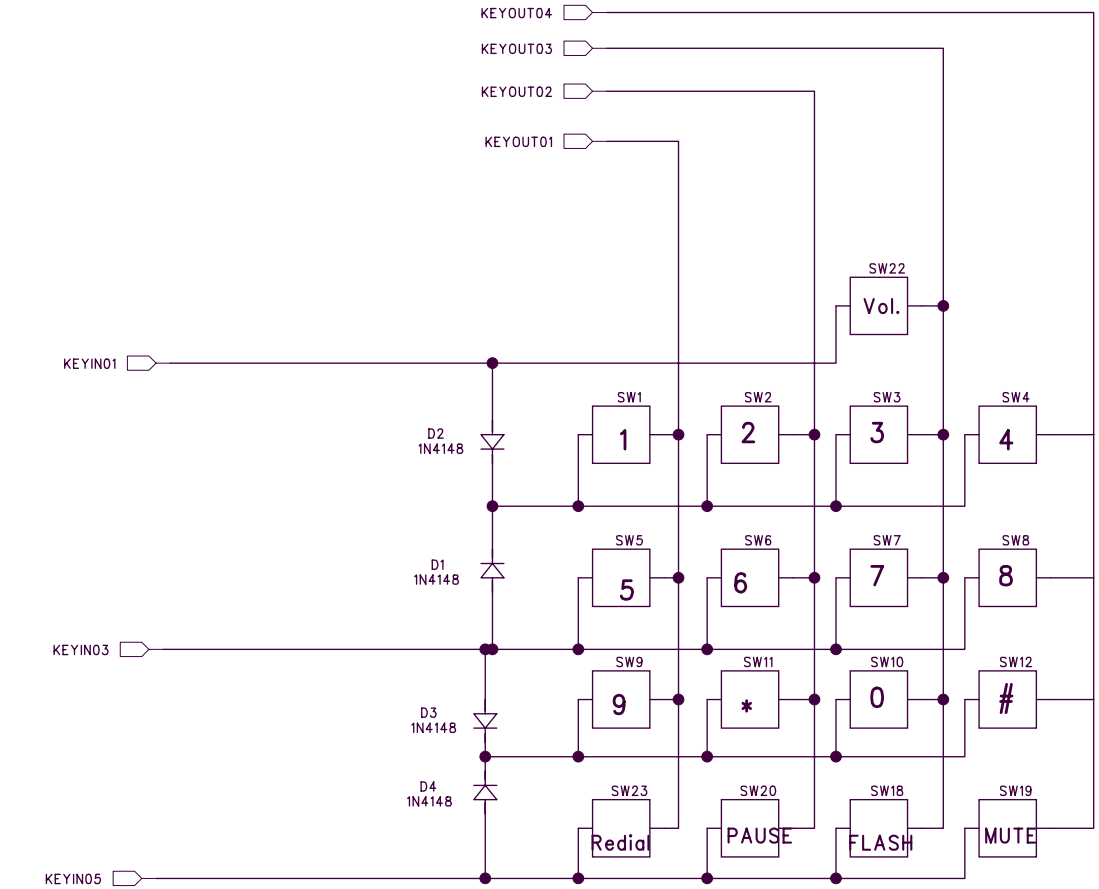

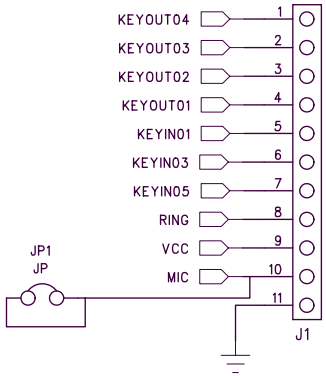

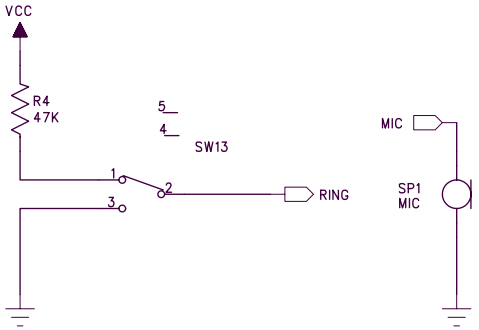

DRAWN: Fung	DATED: 1-8-2001	COMPANY: SENTON ENTERPRISES LIMITED	
CHECKED:	DATED:	TITLE: 39233 KEYBOARD	
QUALITY CONTROL:	DATED:	CODE:	SIZE: A3
RELEASED:	DATED:	DRAWING NO: 202HK-00.SCH	REV: 00
		SCALE:	SHEET: 1 OF 1

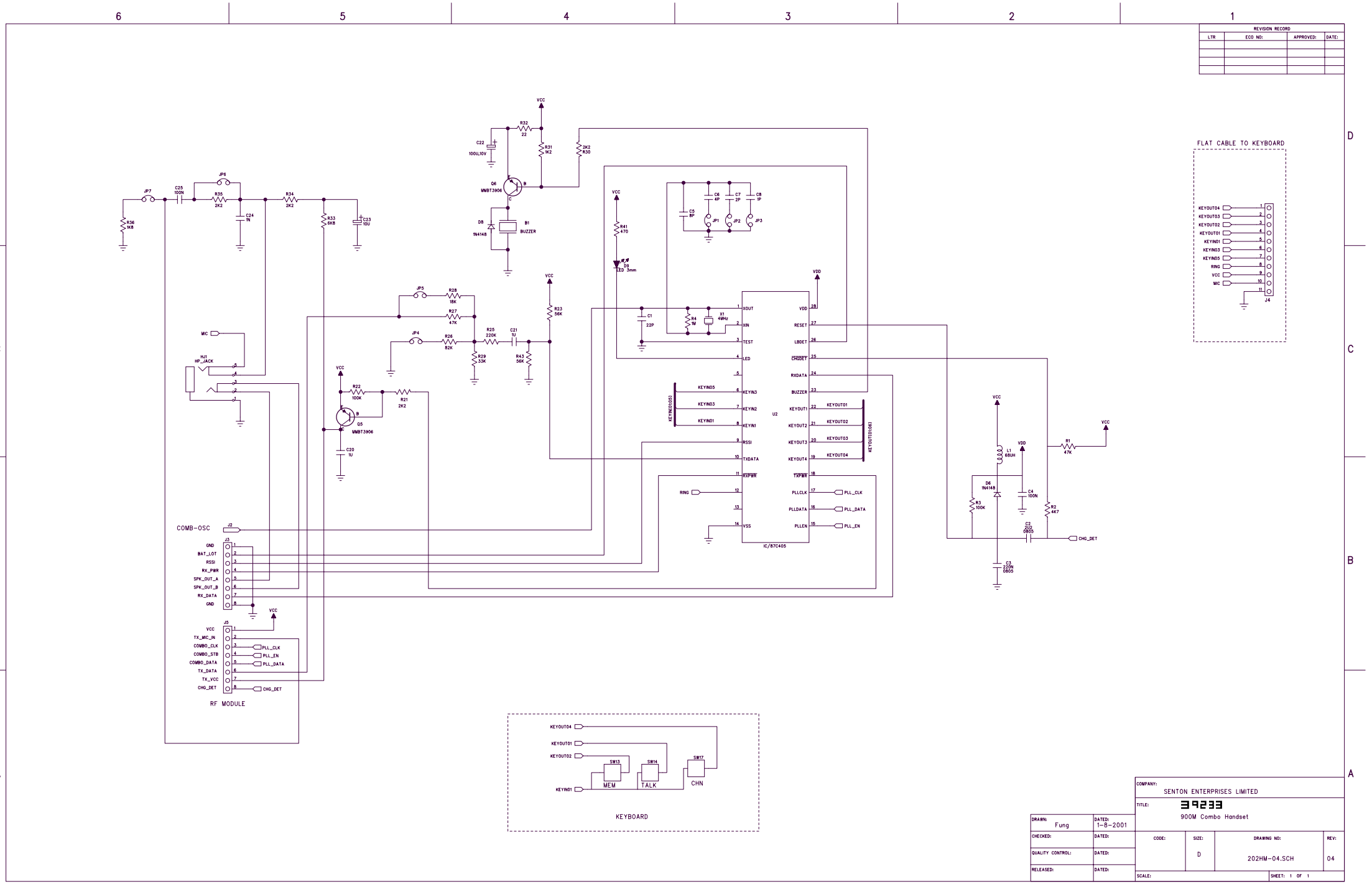
REVISION RECORD
LTR
ECO NO:
APPROVED:
DATE:
FLAT CABLE TO KEYBOARD
KEYOUT04
KEYOUT03
KEYOUT02
KEYOUT01
KEYIN01
KEYIN03
KEYIN05
RING
VCC
MIC
J4
VCC
R32 22
R31 1K2
2K2 R30
C22 100U,10V
Q6 MMBT3906
B1 BUZZER
D8 1N4148
JP6
JP7
C25 100N
R35 2K2
R34 2K2
R36 1K8
C24 1N
R33 6K8
C23 10U
C5 8P
C6 4P
C7 2P
C8 1P
JP1
JP2
JP3
R41 470
D9 LED 3mm
C1 22P
R4 1M
X1 4MHz
VDD
JP5
R28 18K
R27 47K
JP4
R26 82K
R25 220K
C21 1U
R29 33K
R43 56K
R23 56K
MIC
HJ1 HP_JACK
R22 100K
R21 2K2
Q5 MMBT3906
C20 1U
XOUT
XIN
TEST
LED
KEYIN5
KEYIN3
KEYIN2
KEYIN1
RSSI
TXDATA
RXPWR
RING
VSS
VDD
RESET
LBDET
CHGDET
RXDATA
BUZZER
KEYOUT1
KEYOUT2
KEYOUT3
KEYOUT4
TXPWR
PLLCLK
PLLDATA
PLLEN
U2
IC/B7C405
PLL_CLK
PLL_DATA
PLL_EN
CHG_DET
L1 68UH
D6 1N4148
R3 100K
C4 100N
R2 4K7
R1 47K
C2 .02 0805
C3 220N 0805
COMB-OSC
J2
J3
GND
BAT_LOT
RSSI
RX_PWR
SPK_OUT_A
SPK_OUT_B
RX_DATA
GND
J5
VCC
TX_MIC_IN
COMBO_CLK
COMBO_STB
COMBO_DATA
TX_DATA
TX_VCC
CHG_DET
RF MODULE
KEYOUT04
KEYOUT01
KEYOUT02
KEYIN01
SW13
SW14
SW17
MEM
TALK
CHN
KEYBOARD
COMPANY:
SENTON ENTERPRISES LIMITED
TITLE:
39233
900M Combo Handset
DRAWN: Fung
DATED: 1-8-2001
CHECKED:
DATED:
QUALITY CONTROL:
DATED:
RELEASED:
DATED:
CODE:
SIZE: D
DRAWING NO: 202HM-04.SCH
REV: 04
SCALE:
SHEET: 1 OF 1

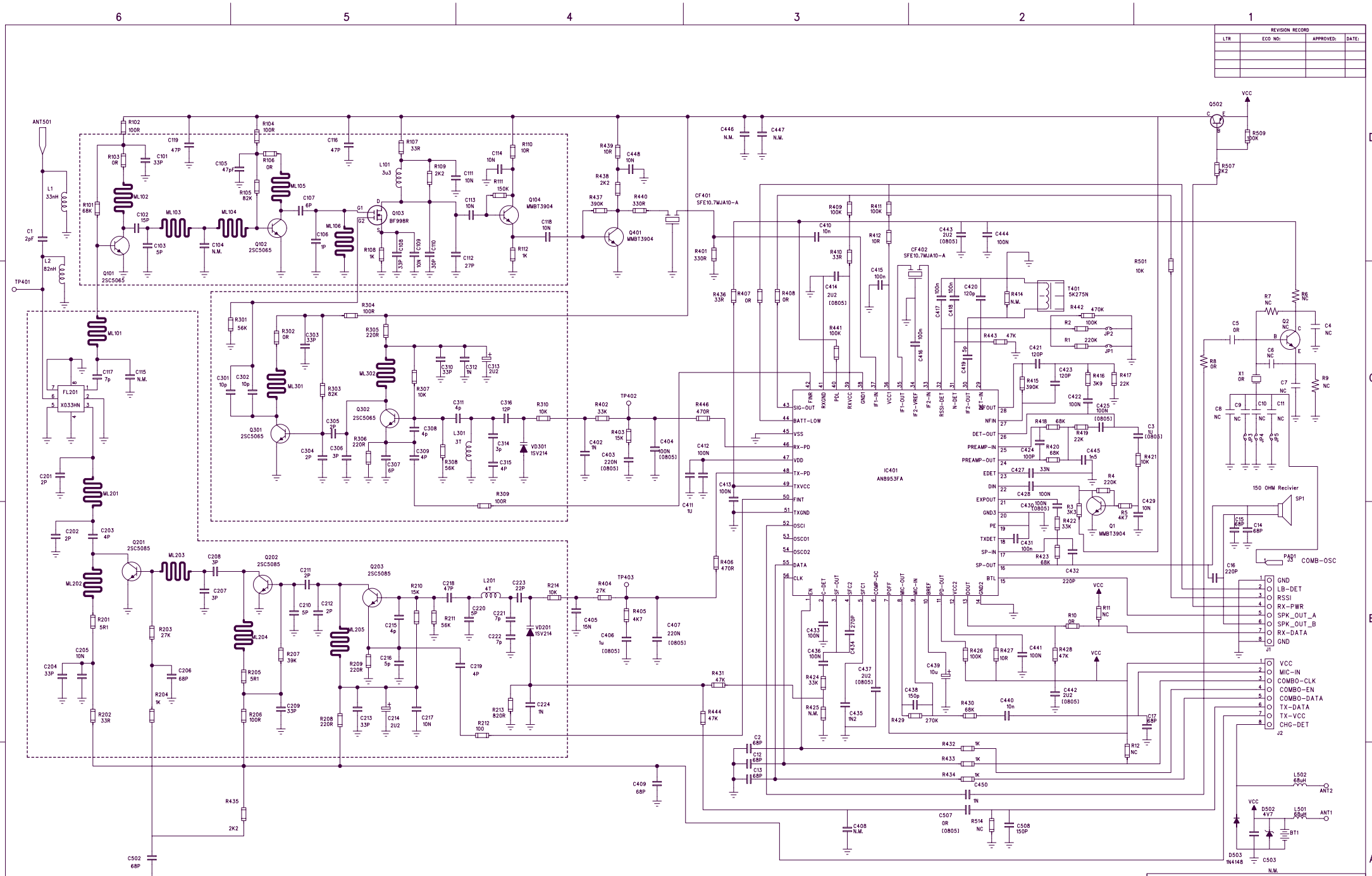
REVISION RECORD
LTR
ECO NO:
APPROVED:
DATE:
ANT501
TP401
L1 33nH
L2 82nH
C1 2pF
FL201 X033HN
Q101 2SC5065
Q102 2SC5065
Q103 BF998R
Q104 MMBT3904
Q401 MMBT3904
CF401 SFE10.7MJA10-A
CF402 SFE10.7MJA10-A
Q301 2SC5065
Q302 2SC5065
Q201 2SC5085
Q202 2SC5085
Q203 2SC5085
TP402
TP403
IC401 AN8953FA
SIG-OUT
BATT-LOW
VSS
RX-PD
VDD
TX-PD
TXVCC
FINT
TXGND
OSCI
OSCO1
OSCO2
DATA
CLK
EN
C-DET
SF-OUT
SFC2
SFC1
COMP-DC
POFF
MIC-OUT
MIC-IN
BREF
PD-OUT
VCC2
DOUT
GND2
FINR
RXGND
PDL
RXVCC
GND
IF1-IN
VCC1
IF1-OUT
IF2-VREF
IF2-IN
RSSI-DET
N-DET
IF2-OUT
IF1-IN
IF1OUT
NFIN
DET-OUT
PREAMP-IN
PREAMP-OUT
EDET
DIN
EXPOUT
GND3
PE
TXDET
SP-IN
SP-OUT
BTL
T401 5K275N
Q502
Q1 MMBT3904
Q2 NC
X1 0R
150 OHM Recivier
SP1
PAD1
COMB-OSC
J1
GND
LB-DET
RSSI
RX-PWR
SPK_OUT_A
SPK_OUT_B
RX-DATA
GND
J2
VCC
MIC-IN
COMBO-CLK
COMBO-EN
COMBO-DATA
TX-DATA
TX-VCC
CHG-DET
L502 68uH
ANT2
L501 68uH
ANT1
D502 4V7
BT1
D503 1N4148
C503
N.M.
COMPANY:
SENTON Enterprices Ltd.
TITLE:
39233
900MHz COMBO MODULE H/S
DRAWN:
FUNG
DATED:
1-8-2001
CHECKED:
QUALITY CONTROL:
RELEASED:
CODE:
SIZE:
A1
DRAWING NO:
202HR-05.SCH
REV:
05
SCALE:
SHEET: 1 OF 1