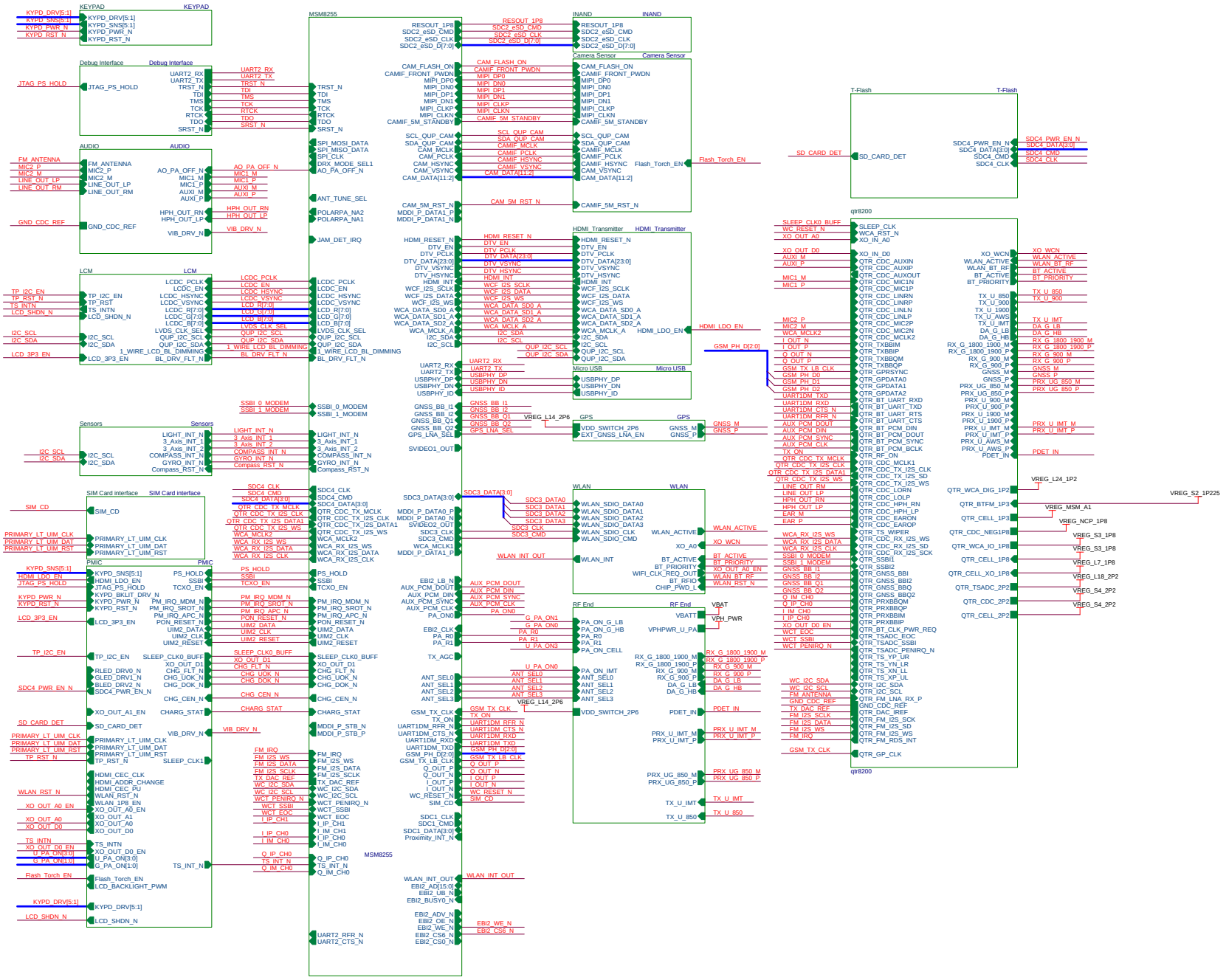

ZHNTD

Drawing Title: Yeka 9.7 PAD

Page Title: Top Block Diagram

Size	Document Number	Rev
A2	<Doc>	001

Date: Friday, December 07, 2012 Sheet 2 of 35

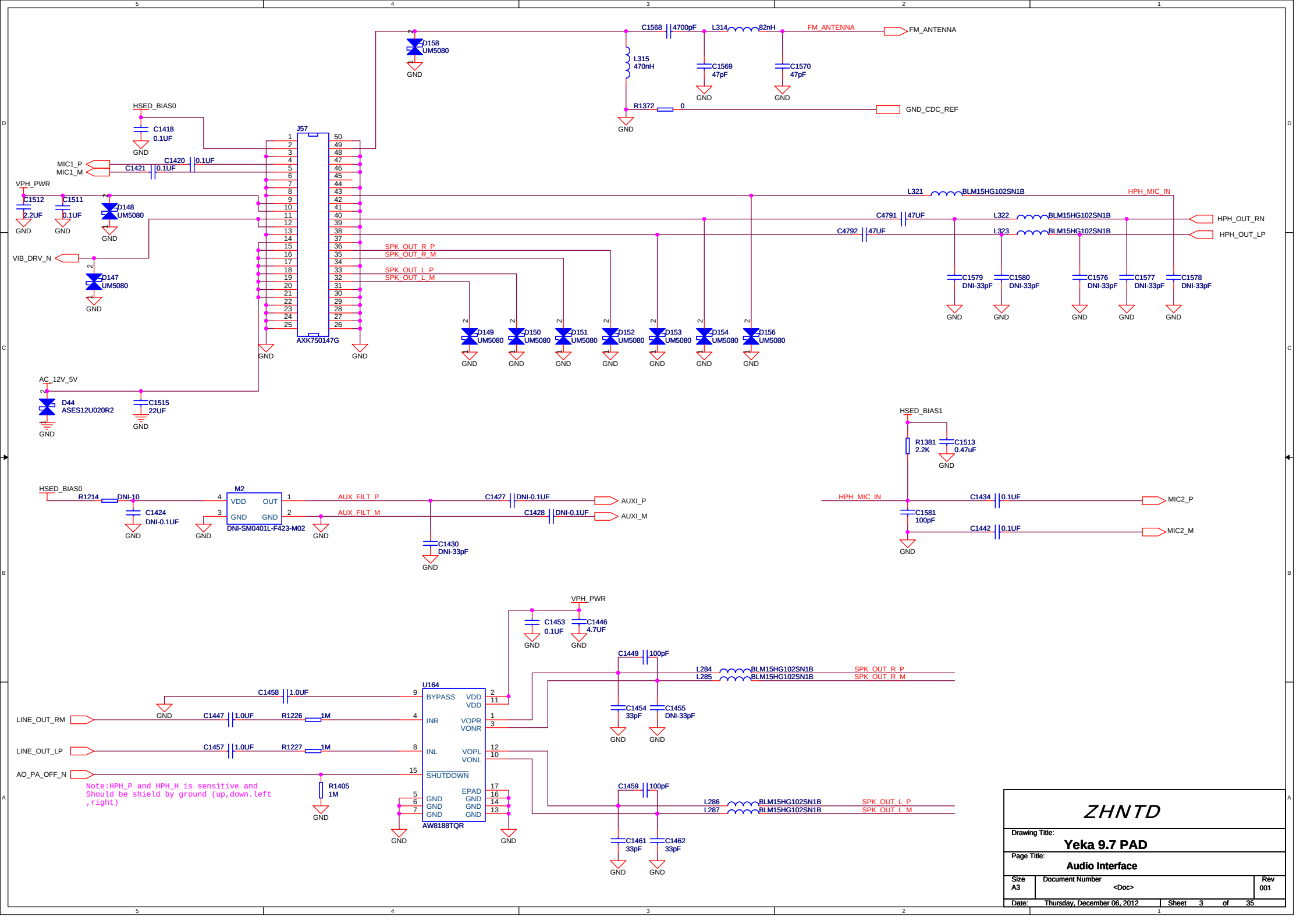
FM_ANTENNA
C1568 4700pF
L314 82nH
L315 470nH
C1569 47pF
C1570 47pF
R1372 0
GND_CDC_REF
D158 UM5080
HSED_BIAS0
C1418 0.1UF
J57
AXK750147G
MIC1_P
MIC1_M
C1420 0.1UF
C1421 0.1UF
VPH_PWR
C1512 2.2UF
C1511 0.1UF
D148 UM5080
VIB_DRV_N
D147 UM5080
L321 BLM15HG102SN1B
HPH_MIC_IN
C4791 47UF
C4792 47UF
L322 BLM15HG102SN1B
L323 BLM15HG102SN1B
HPH_OUT_RN
HPH_OUT_LP
C1579 DNI-33pF
C1580 DNI-33pF
C1576 DNI-33pF
C1577 DNI-33pF
C1578 DNI-33pF
SPK_OUT_R_P
SPK_OUT_R_M
SPK_OUT_L_P
SPK_OUT_L_M
D149 UM5080
D150 UM5080
D151 UM5080
D152 UM5080
D153 UM5080
D154 UM5080
D156 UM5080
AC_12V_5V
D44 ASES12U020R2
C1515 22UF
HSED_BIAS1
R1381 2.2K
C1513 0.47uF
HSED_BIAS0
R1214 DNI-10
C1424 DNI-0.1UF
M2
VDD OUT
GND GND
DNI-SM0401L-F423-M02
AUX_FILT_P
AUX_FILT_M
C1427 DNI-0.1UF
C1428 DNI-0.1UF
AUXI_P
AUXI_M
C1430 DNI-33pF
HPH_MIC_IN
C1581 100pF
C1434 0.1UF
C1442 0.1UF
MIC2_P
MIC2_M
VPH_PWR
C1453 0.1UF
C1446 4.7UF
C1449 100pF
L284 BLM15HG102SN1B
L285 BLM15HG102SN1B
SPK_OUT_R_P
SPK_OUT_R_M
C1454 33pF
C1455 DNI-33pF
U164
BYPASS
VDD
INR
VOPR
VONR
INL
VOPL
VONL
SHUTDOWN
EPAD
GND
AW8188TQR
C1458 1.0UF
C1447 1.0UF
R1226 1M
C1457 1.0UF
R1227 1M
LINE_OUT_RM
LINE_OUT_LP
AO_PA_OFF_N
R1405 1M
Note:HPH_P and HPH_H is sensitive and Should be shield by ground (up,down.left ,right)
C1459 100pF
L286 BLM15HG102SN1B
L287 BLM15HG102SN1B
SPK_OUT_L_P
SPK_OUT_L_M
C1461 33pF
C1462 33pF
ZHNTD
Drawing Title:
Yeka 9.7 PAD
Page Title:
Audio Interface
Size A3
Document Number <Doc>
Rev 001
Date: Thursday, December 06, 2012
Sheet 3 of 35

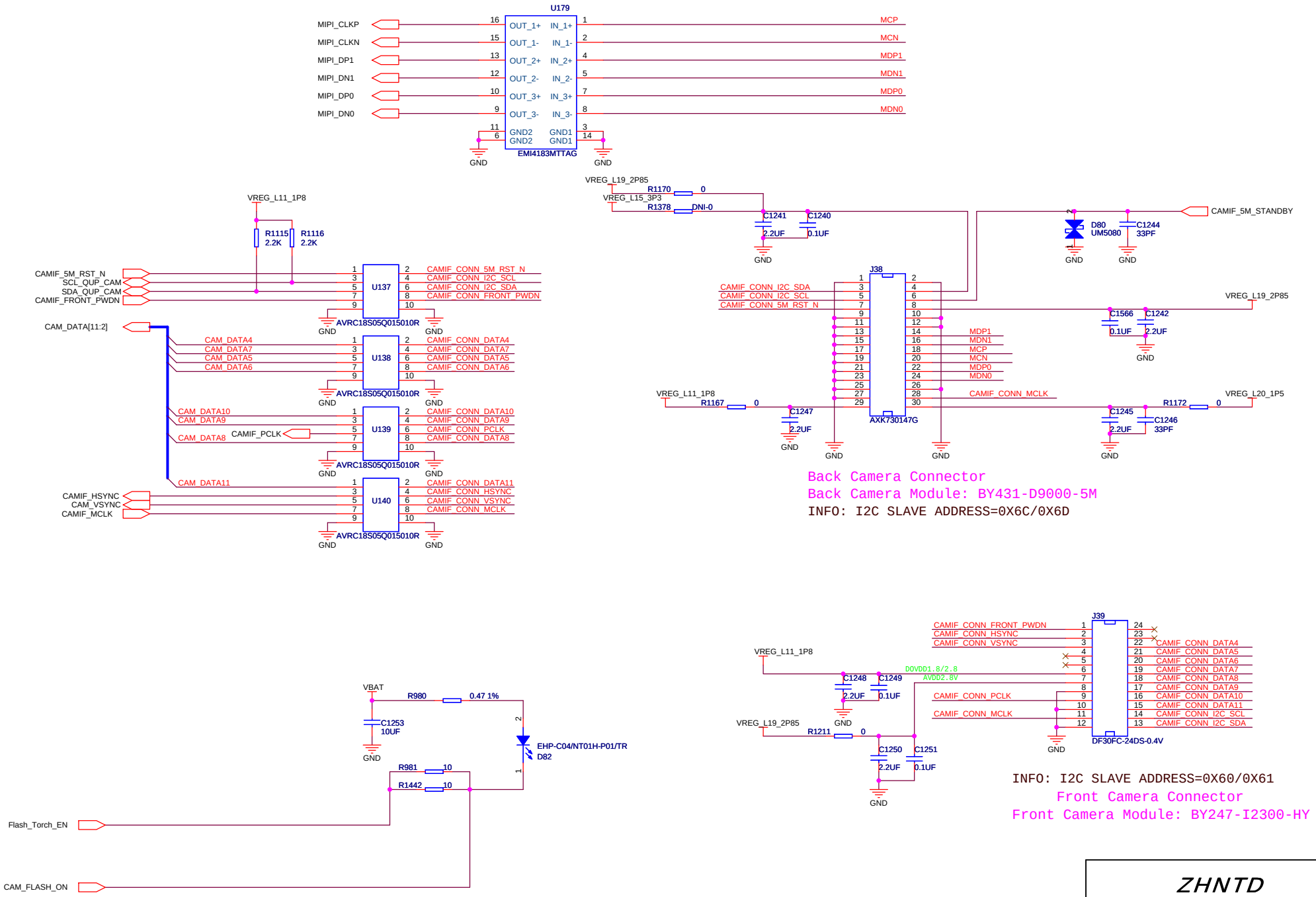

ZHNTD

Drawing Title: **Yeka 9.7 PAD**

Page Title: **Camera Interface**

Size	Document Number	Rev
A3	<Doc>	001

Date: Thursday, December 06, 2012 | Sheet 4 of 35

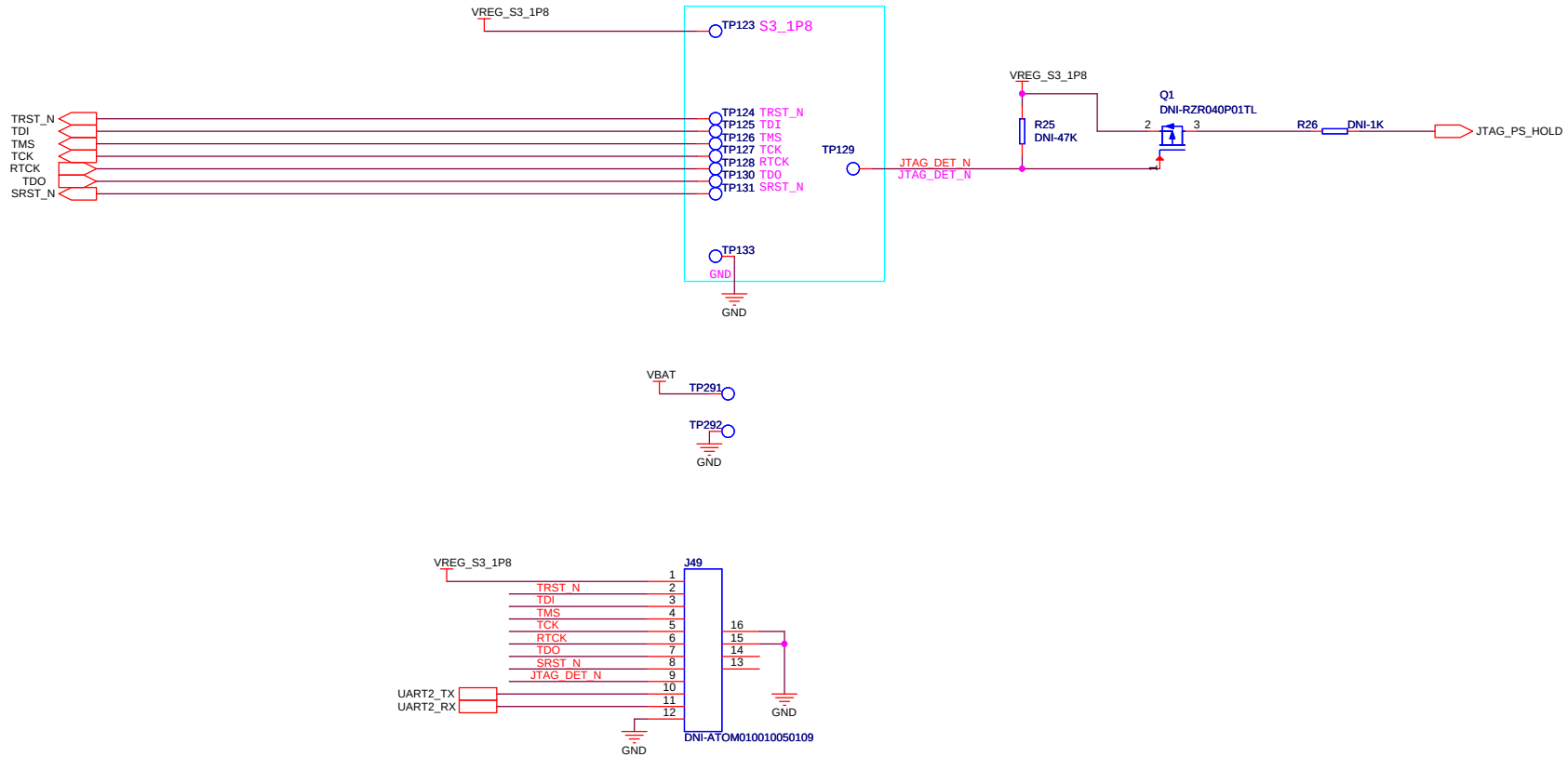

SH1 Cover_HDMI_standard — GND

SH2 Cover_HDMI_standard — GND

SH3 Cover_HDMI_standard — GND

SH4 Cover_LCD_TS_yeka_97 — GND

SH5 Cover_HDMI_standard — GND

SH6 Cover_LCD_TS_yeka_97 — GND

SH7 COVER_GPS_standard — GND

SH8 Frame_PMIC-CHG_yeka_72-97 — GND

SH9 Frame_BB_yeka_72-97 — GND

SH10 Frame_RF_yeka_72-97 — GND

ZHNTD

Drawing Title: **Yeka 9.7 PAD**

Page Title: **Debug Interface**

Size	Document Number	Rev
A3	<Doc>	001

Date: Thursday, December 06, 2012 | Sheet 5 of 35

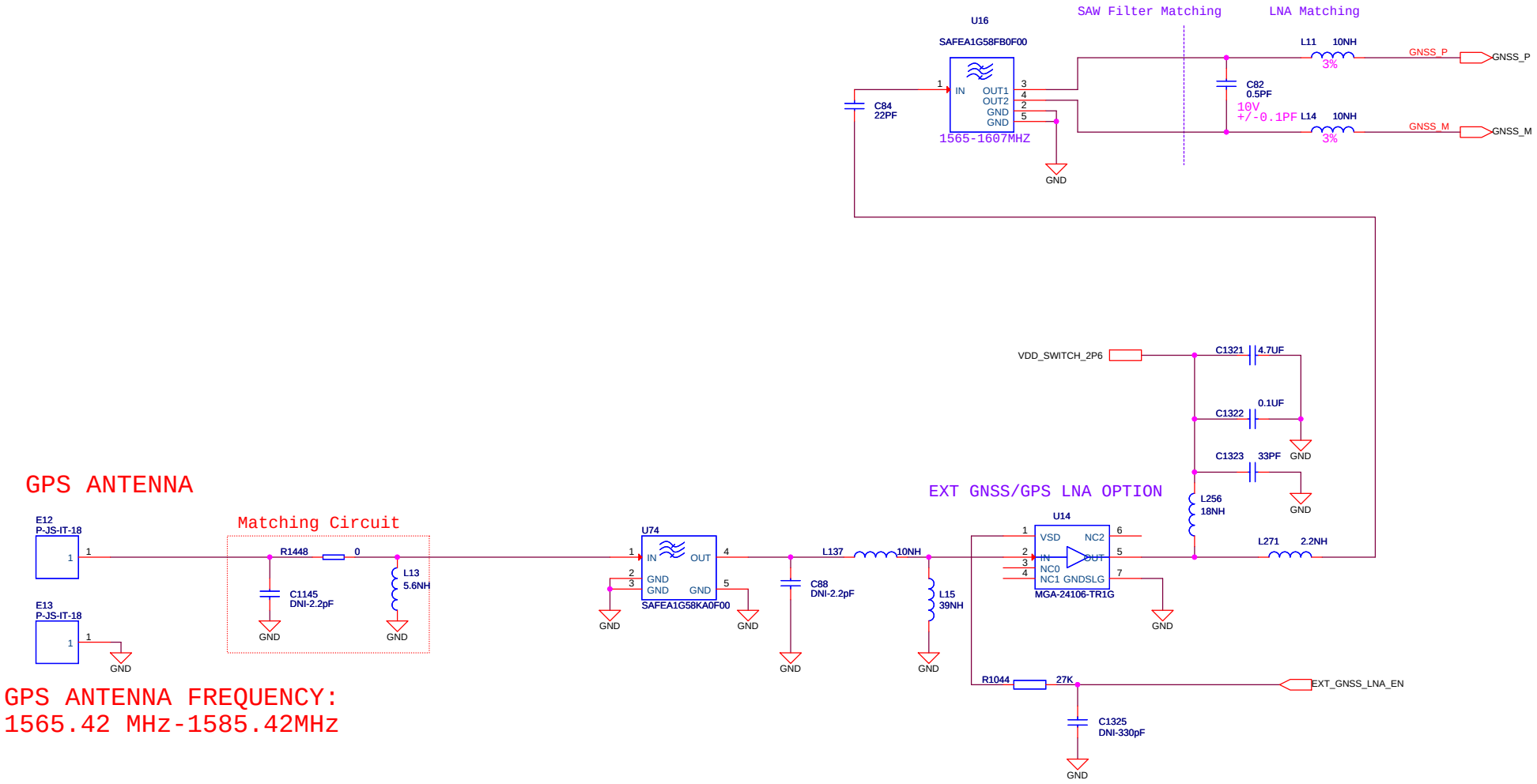

GPS ANTENNA FREQUENCY:
1565.42 MHz-1585.42MHz

ZHNTD

Drawing Title: Yeka 9.7 PAD

Page Title: GPS

Size	Document Number	Rev
A3	<Doc>	001

Date: Tuesday, February 05, 2013 | Sheet 6 of 35

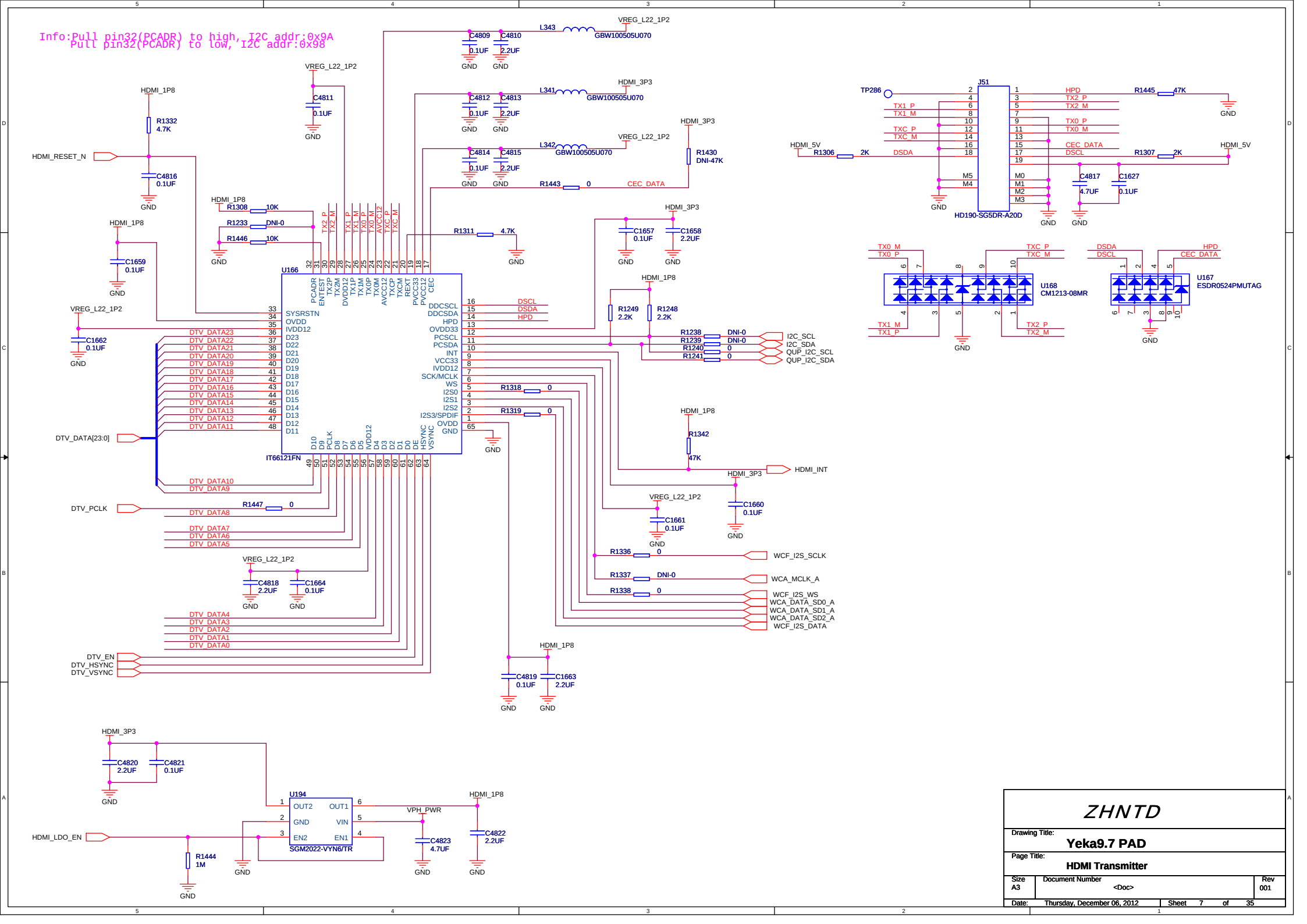
Info:Pull pin32(PCADR) to high, I2C addr:0x9A
Pull pin32(PCADR) to low, I2C addr:0x98
U166
IT66121FN
SYSRSTN
OVDD
IVDD12
D23
D22
D21
D20
D19
D18
D17
D16
D15
D14
D13
D12
D11
DDCSCL
DDCSDA
HPD
OVDD33
PCSCL
PCSDA
INT
VCC33
IVDD12
SCK/MCLK
WS
I2S0
I2S1
I2S2
I2S3/SPDIF
OVDD
GND
PCADR
ENTEST
TX2P
TX2M
DVDD12
TX1P
TX1M
TX0P
TX0M
AVCC12
TXCP
TXCM
REXT
PVCC33
PVCC12
CEC
D10
D9
PCLK
D8
D7
D6
D5
IVDD12
D4
D3
D2
D1
D0
DE
HSYNC
VSYNC
DTV_DATA[23:0]
DTV_PCLK
DTV_EN
DTV_HSYNC
DTV_VSYNC
HDMI_RESET_N
HDMI_1P8
HDMI_3P3
HDMI_5V
HDMI_INT
HDMI_LDO_EN
VREG_L22_1P2
VPH_PWR
WCF_I2S_SCLK
WCA_MCLK_A
WCF_I2S_WS
WCA_DATA_SD0_A
WCA_DATA_SD1_A
WCA_DATA_SD2_A
WCF_I2S_DATA
I2C_SCL
I2C_SDA
QUP_I2C_SCL
QUP_I2C_SDA
CEC_DATA
DSCL
DSDA
GND
L343 GBW100505U070
L341 GBW100505U070
L342 GBW100505U070
J51
HD190-SG5DR-A20D
TP286
U168
CM1213-08MR
U167
ESDR0524PMUTAG
U194
SGM2022-VYN6/TR
OUT2
OUT1
GND
VIN
EN2
EN1
ZHNTD
Drawing Title:
Yeka9.7 PAD
Page Title:
HDMI Transmitter
Size
A3
Document Number
<Doc>
Rev
001
Date:
Thursday, December 06, 2012
Sheet 7 of 35

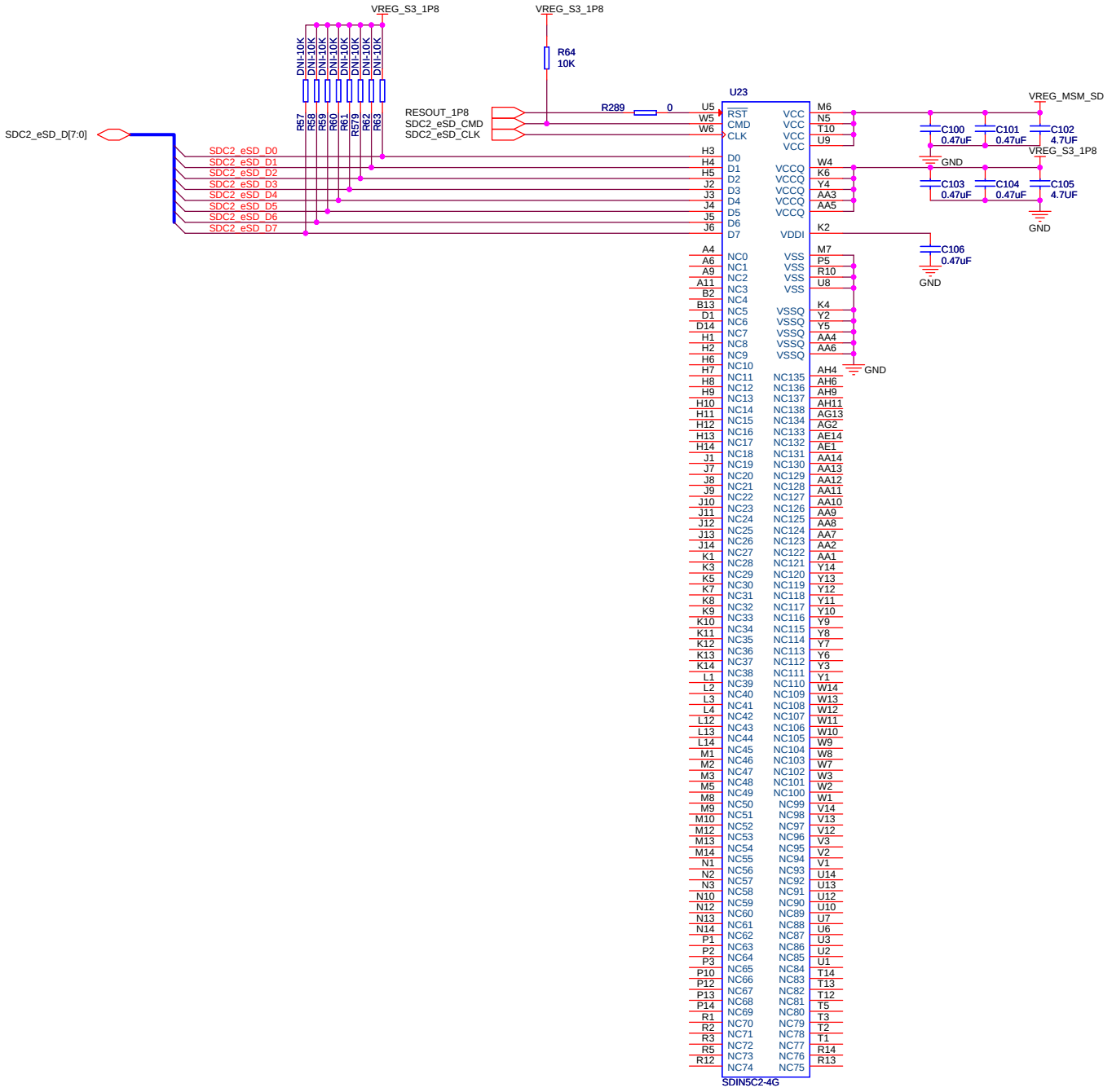

ZHNTD

Drawing Title: **Yeka 9.7 PAD**

Page Title: **INAND**

Size	Document Number	Rev
A3	<Doc>	001

Date: Thursday, December 06, 2012 | Sheet 8 of 35

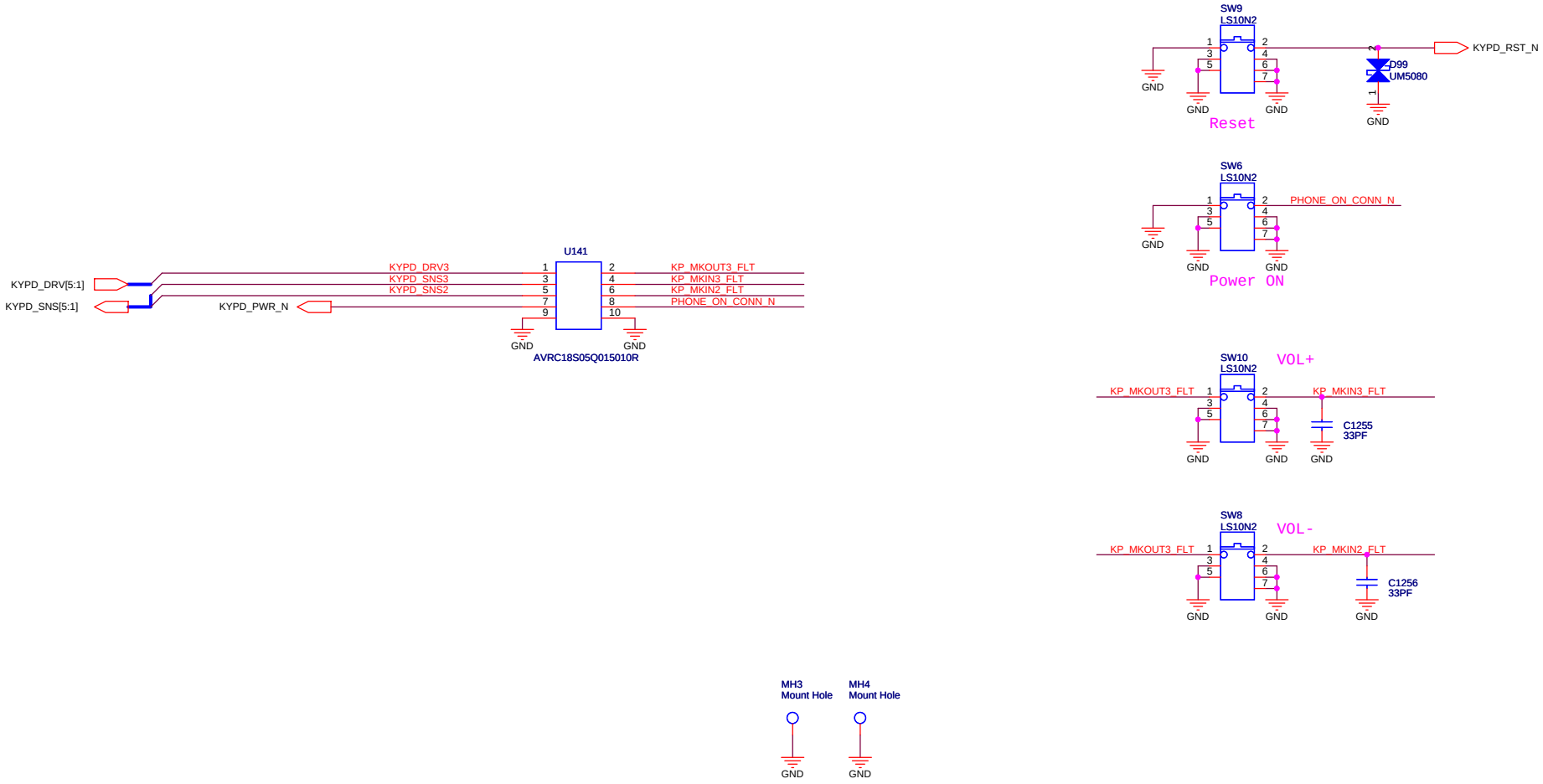

ZHNTD

Drawing Title: **Yeka 9.7 PAD**

Page Title: **Keypad**

Size	Document Number	Rev
A3	<Doc>	001

Date: Thursday, December 06, 2012 | Sheet 9 of 35

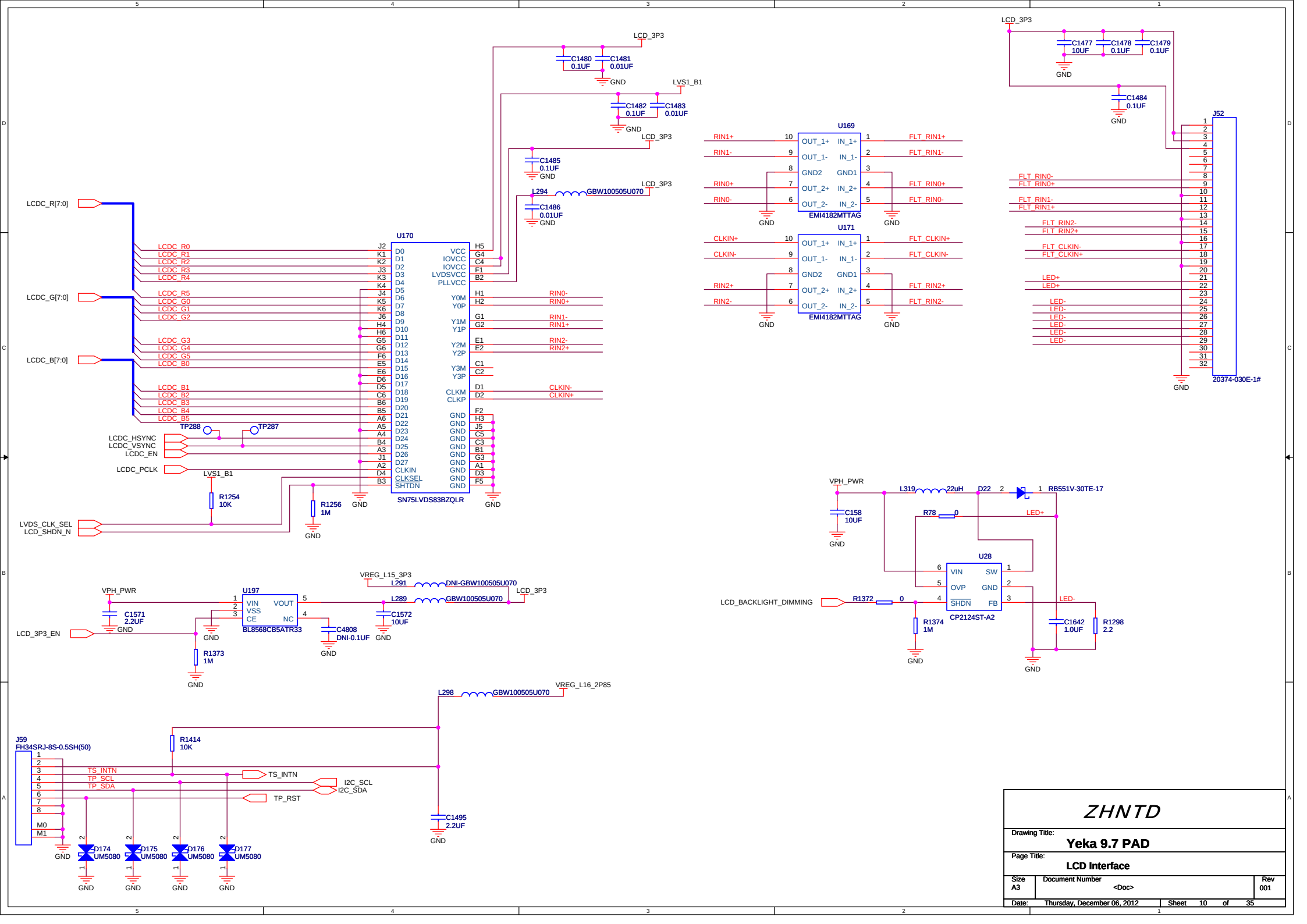
LCD_3P3
C1480 0.1UF
C1481 0.01UF
GND
LVS1_B1
C1482 0.1UF
C1483 0.01UF
C1485 0.1UF
L294 GBW100505U070
C1486 0.01UF
LCDC_R[7:0]
LCDC_G[7:0]
LCDC_B[7:0]
U170
SN75LVDS83BZQLR
TP288
TP287
LCDC_HSYNC
LCDC_VSYNC
LCDC_EN
LCDC_PCLK
R1254 10K
R1256 1M
LVDS_CLK_SEL
LCD_SHDN_N
U169
EMI4182MTTAG
U171
EMI4182MTTAG
C1477 10UF
C1478 0.1UF
C1479 0.1UF
C1484 0.1UF
J52
20374-030E-1#
VPH_PWR
C158 10UF
L319 22uH
D22 RB551V-30TE-17
R78 0
LED+
U28
CP2124ST-A2
LCD_BACKLIGHT_DIMMING
R1372 0
R1374 1M
C1642 1.0UF
R1298 2.2
LED-
VREG_L15_3P3
L291 DNI-GBW100505U070
L289 GBW100505U070
U197
BL8568CB5ATR33
C1571 2.2UF
LCD_3P3_EN
R1373 1M
C4808 DNI-0.1UF
C1572 10UF
VREG_L16_2P85
L298 GBW100505U070
J59
FH34SRJ-8S-0.5SH(50)
R1414 10K
TS_INTN
TP_SCL
TP_SDA
TP_RST
I2C_SCL
I2C_SDA
C1495 2.2UF
D174 UM5080
D175 UM5080
D176 UM5080
D177 UM5080
ZHNTD
Drawing Title: Yeka 9.7 PAD
Page Title: LCD Interface
Size A3
Document Number <Doc>
Rev 001
Date: Thursday, December 06, 2012
Sheet 10 of 35

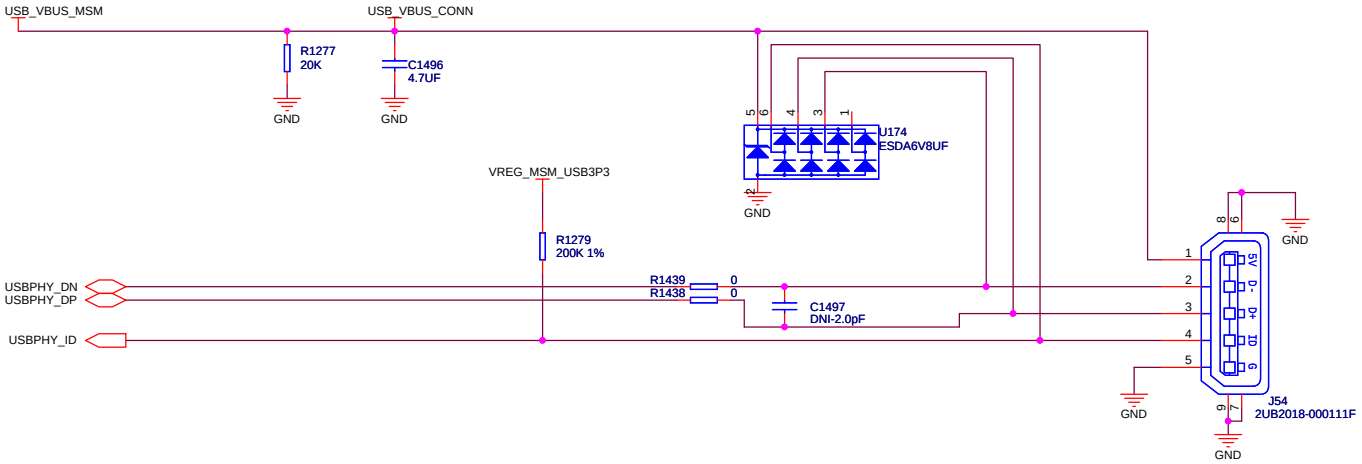

ZHNTD

Drawing Title: **Yeka 9.7 PAD**

Page Title: **Micro USB Interface**

Size	Document Number	Rev
A3	<Doc>	001

Date: Thursday, December 06, 2012 | Sheet 11 of 35

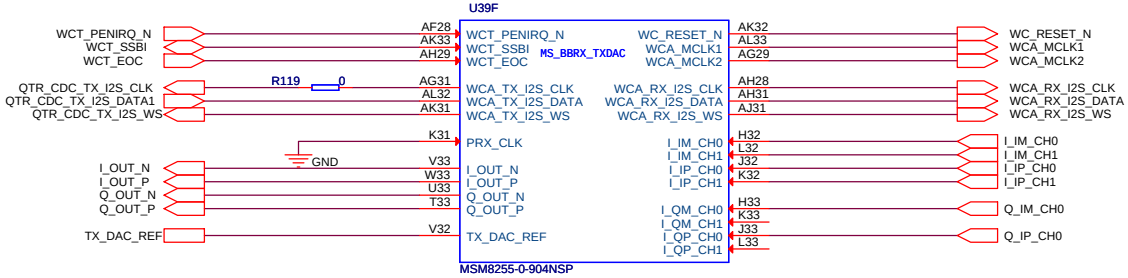

CPU FREQUENCY:1.4GHz

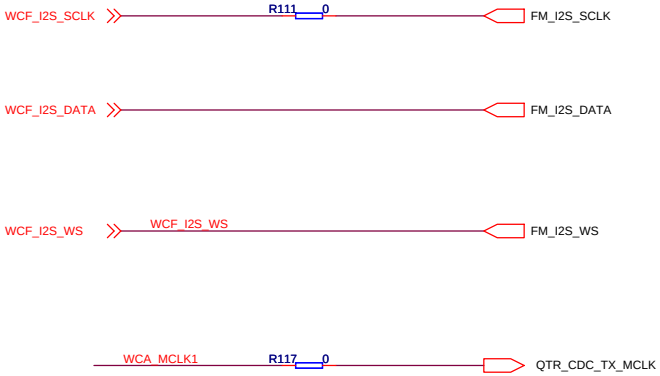

ZHNTD

Drawing Title: **Yeka 9.7 PAD**

Page Title: **MSM8255 BBRX_TXDAC**

Size	Document Number	Rev
A3	<Doc>	001

Date: Tuesday, February 05, 2013 | Sheet 12 of 35

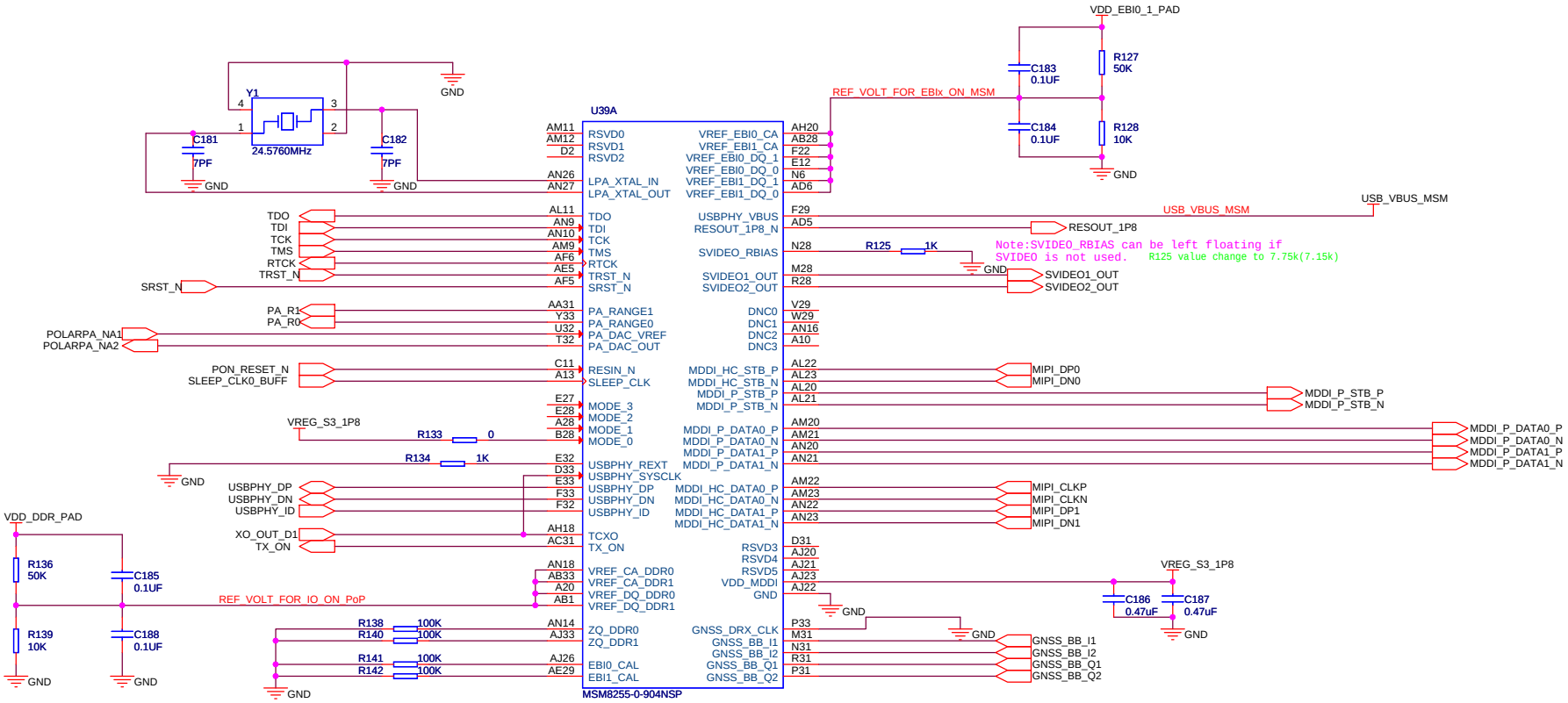

CPU FREQUENCY:1.4GHz

ZHNTD

Drawing Title: **Yeka 9.7 PAD**

Page Title: **MSM8255 Control Interface and HS USB**

Size	Document Number	Rev
A3	<Doc>	001

Date: Tuesday, February 05, 2013 | Sheet 13 of 35

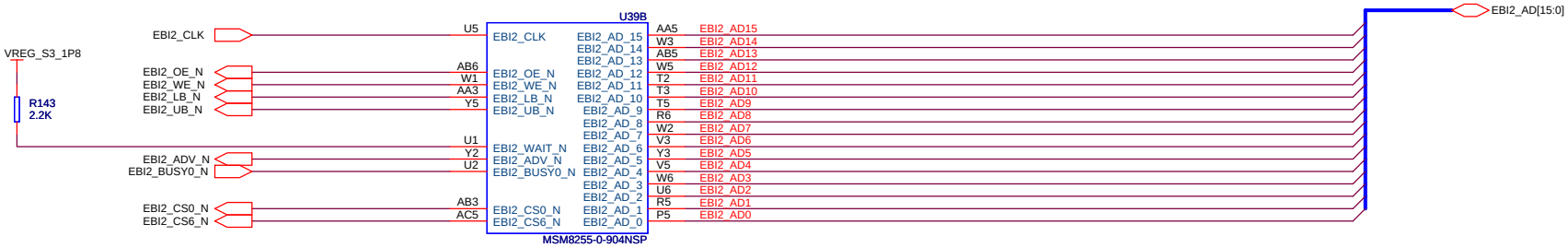

CPU FREQUENCY:1.4GHz

ZHNTD

Drawing Title: **Yeka 9.7 PAD**

Page Title: **MSM8255 EBI2**

Size	Document Number	Rev
A3	<Doc>	001

Date: Tuesday, February 05, 2013 | Sheet 14 of 35

CPU FREQUENCY:1.4GHz

VREG_S3_1P8

R144 2.2K
R145 2.2K
R1039 DNI-10K
R1040 DNI-10K

VREG_S3_1P8

R1398 1M CHG_UOK_N
R1399 1M CHG_DOK_N
R1400 1M CHARG_STAT
R1401 1M CHG_FLT_N

U39C

WC_I2C_SCL AF29 — WC_I2C_SCL — MPM_GPIO_1 AJ18 — TCXO_EN
WC_I2C_SDA AG28 — WC_I2C_SDA — MPM_GPIO_2 AL19 — SSBI

HDMI_I2C QUP_I2C_SCL C14 — GPIO_0 — GPIO_38 AJ7 — SDC1_CLK
QUP_I2C_SDA A14 — GPIO_1 — GPIO_39 AJ8 — SDC1_CMD

GPIO00_75

CAM_DATA2 E16 — GPIO_2 — GPIO_40 AM4 — SDC1_DATA3
CAM_DATA3 E15 — GPIO_3 — GPIO_41 AH8 — SDC1_DATA2
CAM_DATA4 B17 — GPIO_4 — GPIO_42 AJ6 — SDC1_DATA1
CAM_DATA5 C13 — GPIO_5 — GPIO_43 AL4 — SDC1_DATA0
CAM_DATA6 B16 — GPIO_6 — GPIO_44 AJ11
CAM_DATA7 C19 — GPIO_7 — GPIO_45 AL9 — SPI_CLK
CAM_DATA8 C16 — GPIO_8 — GPIO_46 AL10 — CHG_DOK_N
CAM_DATA9 C20 — GPIO_9 — GPIO_47 AH12 — SPI_MOSI_DATA
CAM_DATA10 A15 — GPIO_10 — GPIO_48 AJ12 — SPI_MISO_DATA
CAM_DATA11 A17 — GPIO_11 — GPIO_49 AG5
CAM_DATA[11:2]
CAM_PCLK C15 — GPIO_12 — GPIO_50 AG3
CAM_HSYNC E17 — GPIO_13 — GPIO_51 AH1
CAM_VSYNC A16 — GPIO_14 — GPIO_52 AG2
CAM_MCLK C18 — GPIO_15 — GPIO_53 AL7 — UIM2_RESET
CAMERA_I2C SCL_QUP_CAM C17 — GPIO_16 — GPIO_54 AJ1 — UIM2_DATA
SDA_QUP_CAM E14 — GPIO_17 — GPIO_55 AH3 — CHG_CEN_N
LCD_G0 AM14 — GPIO_18 — GPIO_56 AH5 — LIGHT_INT_N
LCD_G1 AL15 — GPIO_19 — GPIO_57 AH2 — UIM2_CLK
LCD_B0 AH16 — GPIO_20 — GPIO_58 AL2 — SDC4_CLK
LCD_B1 AM15 — GPIO_21 — GPIO_59 AK3 — SDC4_CMD
LCD_B2 AN15 — GPIO_22 — GPIO_60 AJ3 — SDC4_DATA3
LCD_R0 AH17 — GPIO_23 — GPIO_61 AL1 — SDC4_DATA2
LCD_R1 AL13 — GPIO_24 — GPIO_62 AK1 — SDC4_DATA1
LCD_R2 AJ16 — GPIO_25 — GPIO_63 AL3 — SDC4_DATA0
SIM_CD AG6 — GPIO_26 — GPIO_64 AL8
PM_IRQ_APC_N F14 — GPIO_27 — GPIO_65 AH10 — SDC2_eSD_CMD
PM_IRQ_MDM_N B15 — GPIO_28 — GPIO_66 AJ9 — SDC2_eSD_D3
PS_HOLD AH15 — GPIO_29 — GPIO_67 AN6 — SDC2_eSD_D2
CAM_5M_RST_N AL12 — GPIO_30 — GPIO_68 AM7 — SDC2_eSD_D1
CAMIF_FRONT_PWDN AD3 — GPIO_31 — GPIO_69 AJ10 — SDC2_eSD_D0
PA_ON0 Y31 — GPIO_32 — GPIO_70 AJ5 — I2C_SCL
WLAN_INT_OUT AA29 — GPIO_33 — GPIO_71 AH6 — I2C_SDA
BL_DRV_FLT_N AM16 — GPIO_34 — GPIO_72 C22 — ANT_SEL0
CHG_UOK_N AL16 — GPIO_35 — GPIO_73 C23 — ANT_SEL1
GYRO_INT_N AL18 — GPIO_36 — GPIO_74 A24 — LVDS_CLK_SEL
HDMI_RESET_N AL17 — GPIO_37 — GPIO_75 A25 — DRX_MODE_SEL1

MSM8255-0-904NSP

TP273 TP274

UART2_RFR_N
UART2_CTS_N
UART2_RX
UART2_TX

UART2&UIM1
(UART2:RXD-51\TXD-52\RFR-49\CTS-50)
(UIM1:RESET-50\DATA-52\CLK-49)

UART3&UIM2
(UART3:RXD-53\TXD-54\RFR-57\CTS-55)
(UIM2:RESET-53\DATA-54\CLK-57)

SDC1_DATA[3:0]
SDC4_DATA[3:0]
R328 0 SDC2_eSD_CLK
SDC2_eSD_CLK
SDC2_eSD_D[7:0]

U39D

ANT_SEL2 C24 — GPIO_76 — GPIO_114 AM6 — SDC2_eSD_D5
ANT_SEL3 B26 — GPIO_77 — GPIO_115 AL5 — SDC2_eSD_D4
CHARG_STAT C25 — GPIO_78 — GPIO_116 A8 — SDC3_DATA3
ANT_TUNE_SEL C27 — GPIO_79 — GPIO_117 A9 — SDC3_DATA2
CAM_FLASH_ON B27 — GPIO_80 — GPIO_118 C9 — SDC3_DATA1
GPS_LNA_SEL C26 — GPIO_81 — GPIO_119 B8 — SDC3_DATA0
AO_PA_OFF_N C28 — GPIO_82 — GPIO_120 A7 — WCA_MCLK_A
AH7 — GPIO_83 — GPIO_121 C6 — WCA_DATA_SD0_A
TX_AGC C7 — GPIO_84 — GPIO_122 C5 — WCA_DATA_SD1_A
AC3 — GPIO_85 — GPIO_123 B5 — WCA_DATA_SD2_A
UART2DM_RXD_B
UART2DM_TXD_B
TS_INT_N AE2 — GPIO_86 — GPIO_124 N5 — DTV_PCLK
1_WIRE_LCD_BL_DIMMING AD2 — GPIO_87 — GPIO_125 P1 — DTV_EN
3_Axis_INT_1 AD1 — GPIO_88 — GPIO_126 P2 — DTV_VSYNC
UART2DM_CTS_B_N AE3 — GPIO_89 — GPIO_127 P3 — DTV_HSYNC
UART2DM_RFR_B_N E19 — GPIO_90 — GPIO_128 M1 — DTV_DATA0
LCDC_PCLK AM10 — GPIO_91 — GPIO_129 M2 — DTV_DATA1
LCDC_EN AJ14 — GPIO_92 — GPIO_130 M3 — DTV_DATA2
LCDC_VSYNC F20 — GPIO_93 — GPIO_131 N3 — DTV_DATA3
LCDC_HSYNC AN11 — GPIO_94 — GPIO_132 M5 — DTV_DATA4
LCD_G[7:0] LCD_G2 AJ13 — GPIO_95 — GPIO_133 AE1 — HDMI_INT
LCD_G3 AH13 — GPIO_96 — GPIO_134 AH27 — HDMI_INT
LCD_G4 AL14 — GPIO_97 — GPIO_135 AE32 — UART1DM_RFR_N
LCD_G5 AJ15 — GPIO_98 — GPIO_136 AE33 — UART1DM_CTS_N
LCD_G6 AJ17 — GPIO_99 — GPIO_137 AF31 — UART1DM_RXD
LCD_G7 E20 — GPIO_100 — GPIO_138 A29 — UART1DM_TXD
LCD_B[7:0] LCD_B3 E22 — GPIO_101 — GPIO_139 B30 — AUX_PCM_DOUT
LCD_B4 E25 — GPIO_102 — GPIO_140 B29 — AUX_PCM_DIN
LCD_B5 E24 — GPIO_103 — GPIO_141 A30 — AUX_PCM_SYNC
LCD_B6 E18 — GPIO_104 — GPIO_142 AG33 — AUX_PCM_CLK
LCD_B7 E21 — GPIO_105 — GPIO_143 AE31 — COMPASS_INT_N
LCD_R[7:0] LCD_R3 E23 — GPIO_106 — GPIO_144 AJ29
LCD_R4 F25 — GPIO_107 — GPIO_145 AN30
LCD_R5 F26 — GPIO_108 — GPIO_146 AJ27
LCD_R6 E26 — GPIO_109 — GPIO_147 AM30 — FM_IRQ
LCD_R7 C6 — GPIO_110 — GPIO_148 Y32 — Proximity_INT_N
SDC3_CLK C10 — GPIO_111 — GPIO_149 W32 — Compass_RST_N
SDC3_CMD AN4 — GPIO_112 — GPIO_150 W31
SDC2_eSD_D7 AL6 — GPIO_113

GPIO076_150

SDC2_eSD_D[7:0]
SDC3_DATA[3:0]
DTV_DATA[23:0]
WCF_I2S_WS
WCF_I2S_SCLK
WCF_I2S_DATA

MSM8255-0-904NSP

U39E

JAM_DET_IRQ AB29 — GPIO_151 — GPIO_166 J2 — DTV_DATA11
GSM_TX_CLK AB31 — GPIO_152 — GPIO_167 J5 — DTV_DATA12
GSM_TX_LB_CLK AD33 — GPIO_153 — GPIO_168 G1 — DTV_DATA13
L45 GBW100505U070
GSM_PH_D2 AD32 — GPIO_154 — GPIO_169 H3 — DTV_DATA14
GSM_PH_D1 AD29 — GPIO_155 — GPIO_170 H5 — DTV_DATA15
GSM_PH_D0 AC32 — GPIO_156 — GPIO_171 G2 — DTV_DATA16
GSM_PH_D[2:0]
CAMIF_5M_STANDBY AC29 — GPIO_157 — GPIO_172 G5 — DTV_DATA17
SSBI_1_MODEM Y29 — GPIO_158 — GPIO_173 G3 — DTV_DATA18
SSBI_0_MODEM AD31 — GPIO_159 — GPIO_174 E3 — DTV_DATA19
VREG_S3_1P8
R594 DNI-10K
DTV_DATA5 L3 — GPIO_160 — GPIO_175 F3 — DTV_DATA20
DTV_DATA6 L5 — GPIO_161 — GPIO_176 F5 — DTV_DATA21
R595 DNI-10K DTV_DATA3
DTV_DATA7 K3 — GPIO_162 — GPIO_177 C4 — DTV_DATA22
DTV_DATA8 K5 — GPIO_163 — GPIO_178 E5 — DTV_DATA23
DTV_DATA9 J1 — GPIO_164 — GPIO_179 D3 — PM_IRQ_SROT_N
DTV_DATA10 J3 — GPIO_165 — GPIO_180 C3 — 3_Axis_INT_2
GPIO_181 D1 — CHG_FLT_N

GPIO151_181

MSM8255-0-904NSP

SWITCH	FUNCTION WHEN SWITCH IS CLOSED
R595	BOOT_SCUR
R594	DISABLE WDOG

ZHNTD

Drawing Title: Yeka 9.7 PAD

Page Title: MSM8255 GPIO

Size	Document Number	Rev
A3	<Doc>	001

Date: Tuesday, February 05, 2013 Sheet 15 of 35

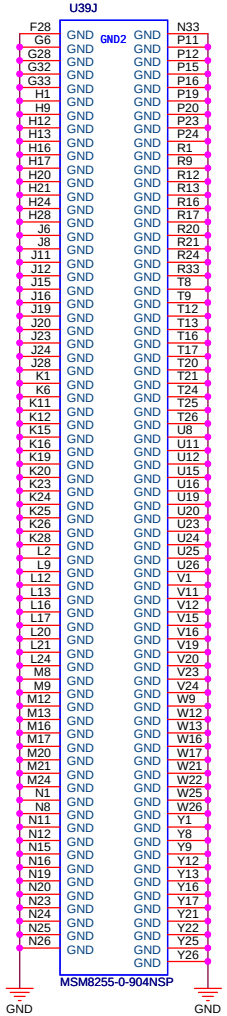

CPU FREQUENCY:1.4GHz

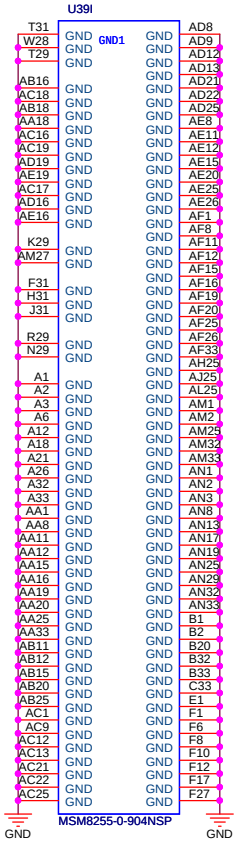

CPU FREQUENCY:1.4GHz

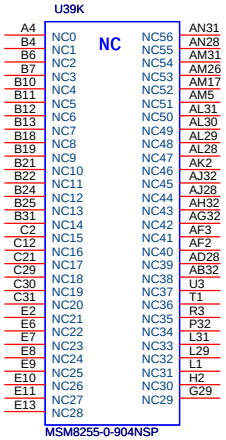

CPU FREQUENCY:1.4GHz

ZHNTD

Drawing Title:	Yeka 9.7 PAD
Page Title:	MSM8255 Ground
Size A3	Document Number <Doc>
Rev 001	
Date: Tuesday, February 05, 2013	Sheet 16 of 35

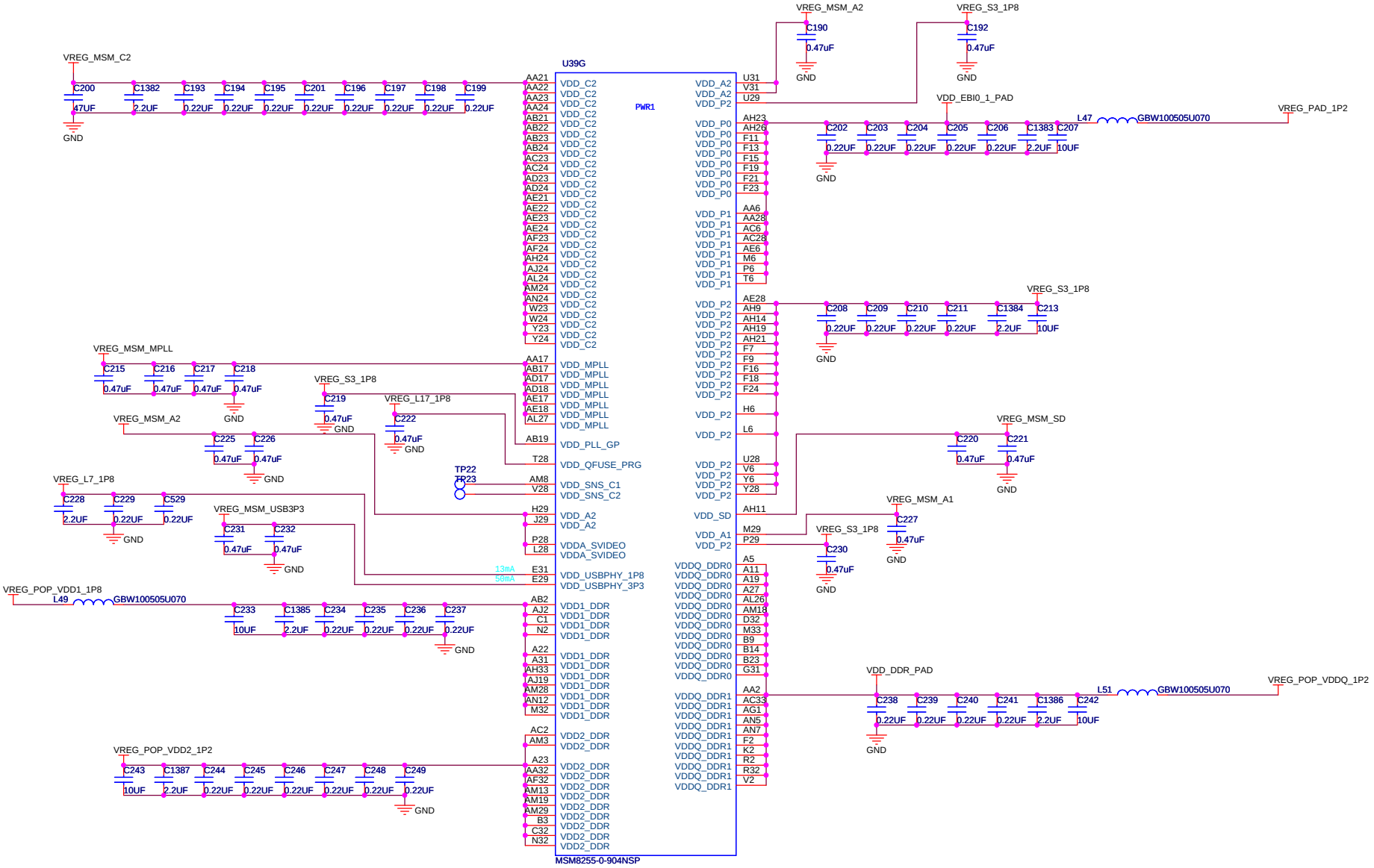

CPU FREQUENCY:1.4GHz

ZHNTD

Drawing Title:	Yeka 9.7 PAD
Page Title:	MSM8255 Power
Size A3	Document Number <Doc>
Rev 001	
Date: Tuesday, February 05, 2013	Sheet 17 of 35

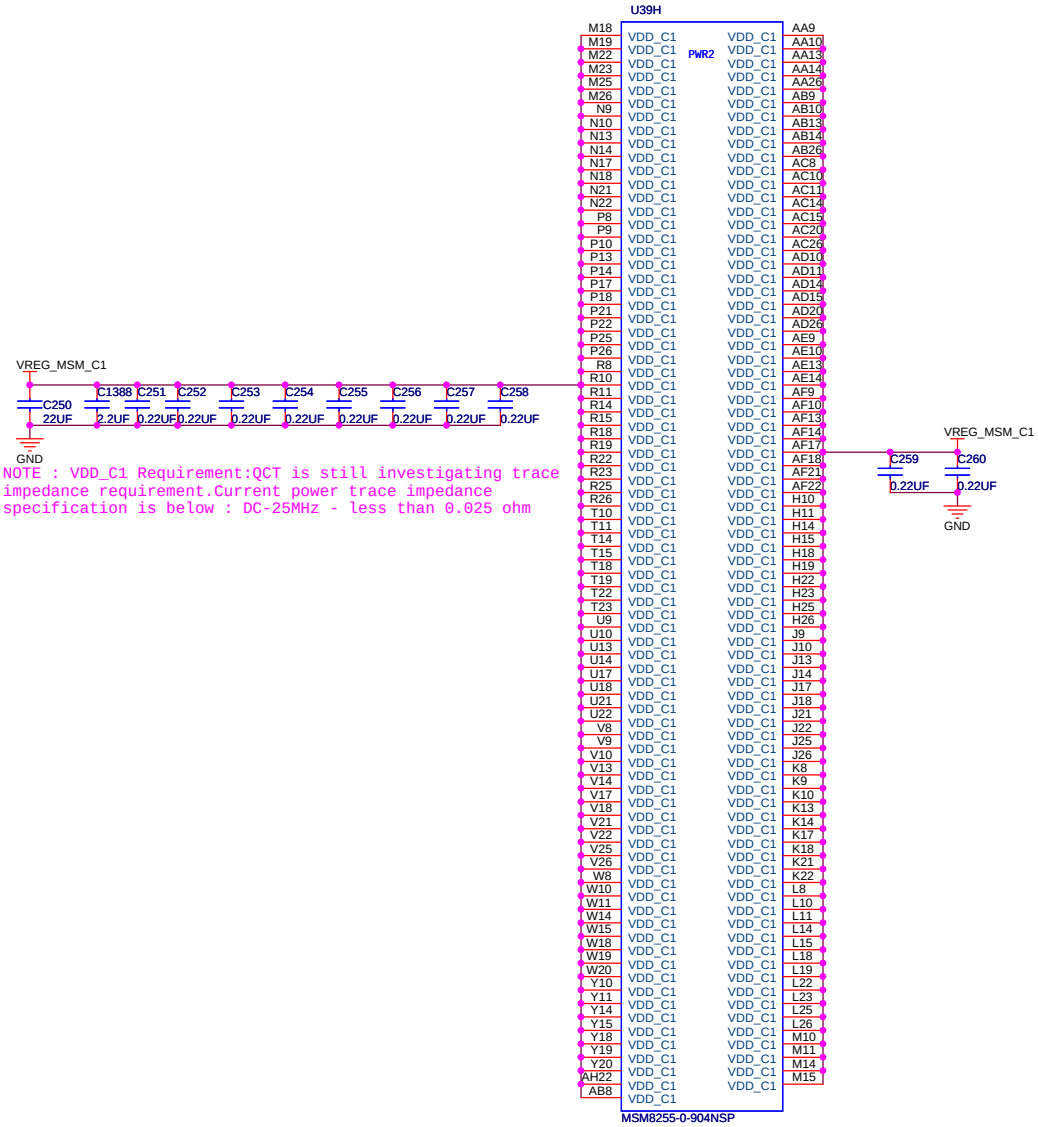

NOTE : VDD_C1 Requirement:QCT is still investigating trace impedance requirement.Current power trace impedance specification is below : DC-25MHz - less than 0.025 ohm

CPU FREQUENCY:1.4GHz

ZHNTD

Drawing Title: Yeka 9.7 PAD

Page Title: MSM8255 Power

Size	Document Number	Rev
A3	<Doc>	001

Date: Tuesday, February 05, 2013 | Sheet 18 of 35

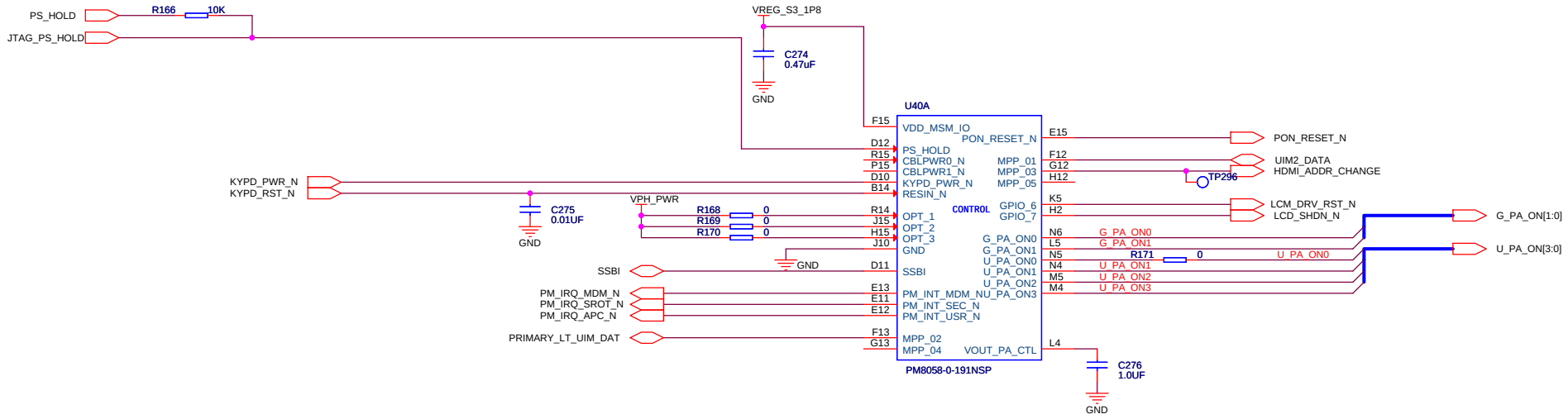

ZHNTD

Drawing Title: **Yeka 9.7 PAD**

Page Title: **PMIC OVP Power Interface**

Size	Document Number	Rev
A3	<Doc>	001

Date: Thursday, December 06, 2012 | Sheet 20 of 35

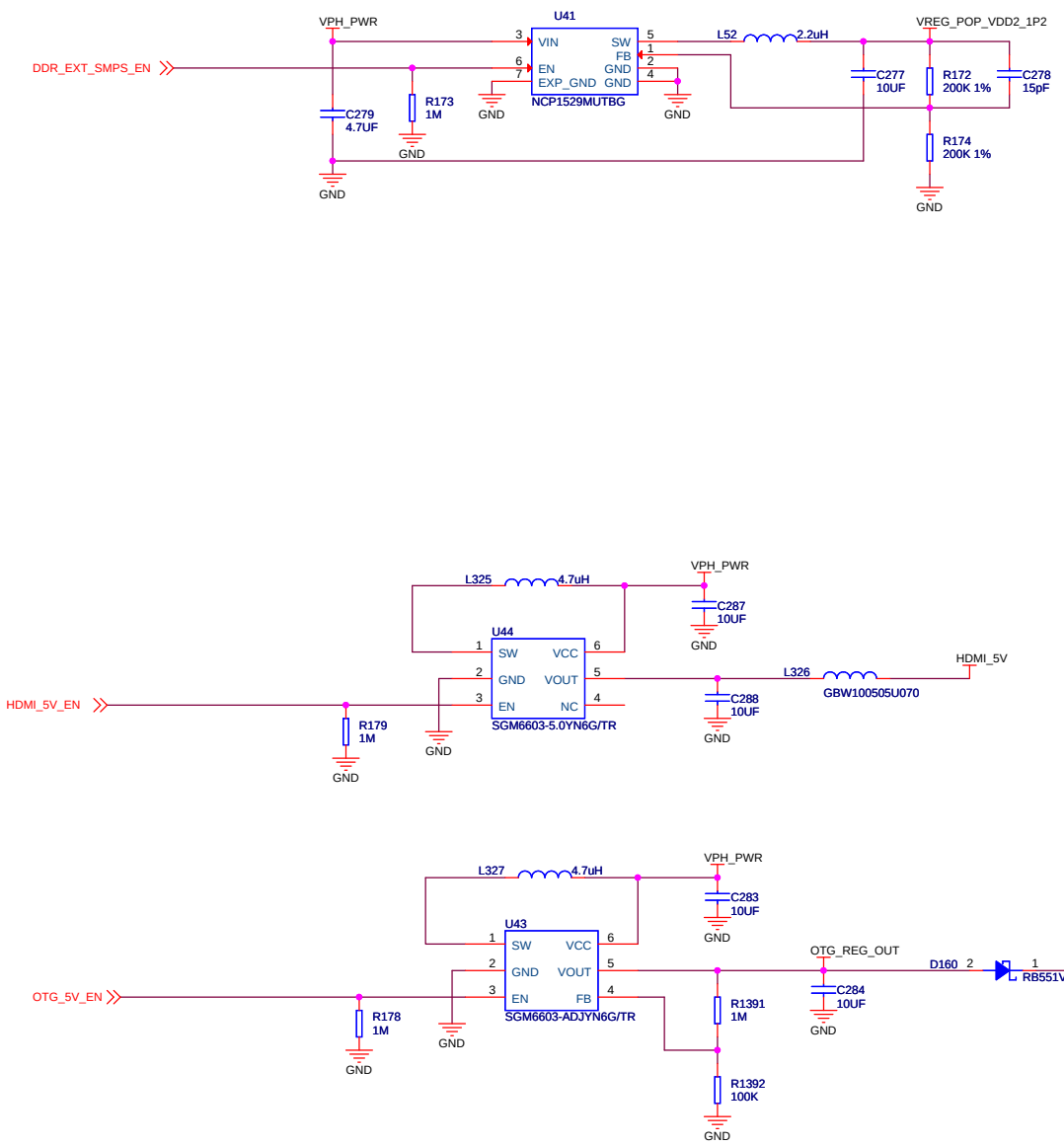

ZHNTD

Drawing Title: **Yeka 9.7 PAD**

Page Title: **External Regulator**

Size	Document Number	Rev
A3	<Doc>	001

Date: Thursday, December 06, 2012 | Sheet 21 of 35

Note on clocks:
1. XTAL I/O(s) and clock(s) traces must be kept as short as possible. It is recommended to route them between ground planes for noise shielding.
2. To avoid overloading PM8058 sleep clock buffer, one should utilize alternate sleep clock outputs or use external buffer if needed.

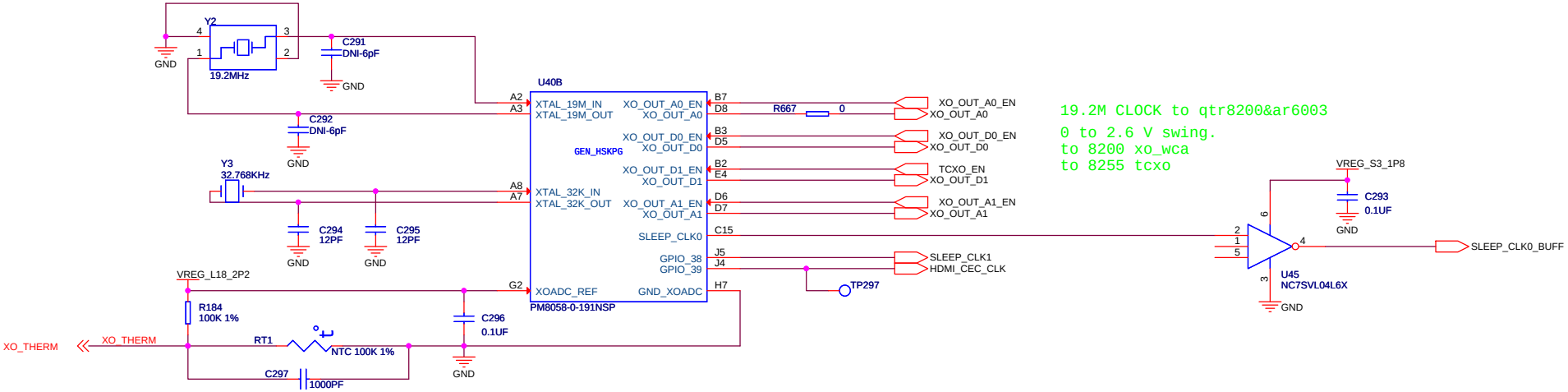

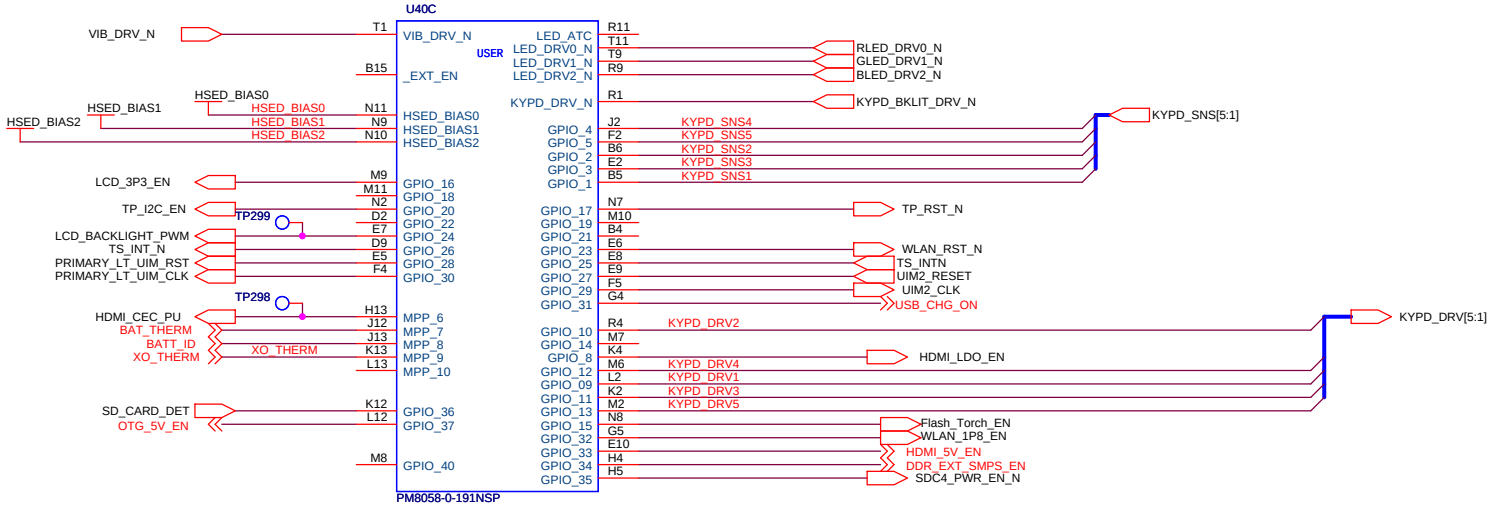

ZHNTD

Drawing Title: **Yeka 9.7 PAD**

Page Title: **PMIC GEN**

Size	Document Number	Rev
A3	<Doc>	001

Date: Friday, December 07, 2012 | Sheet 22 of 35

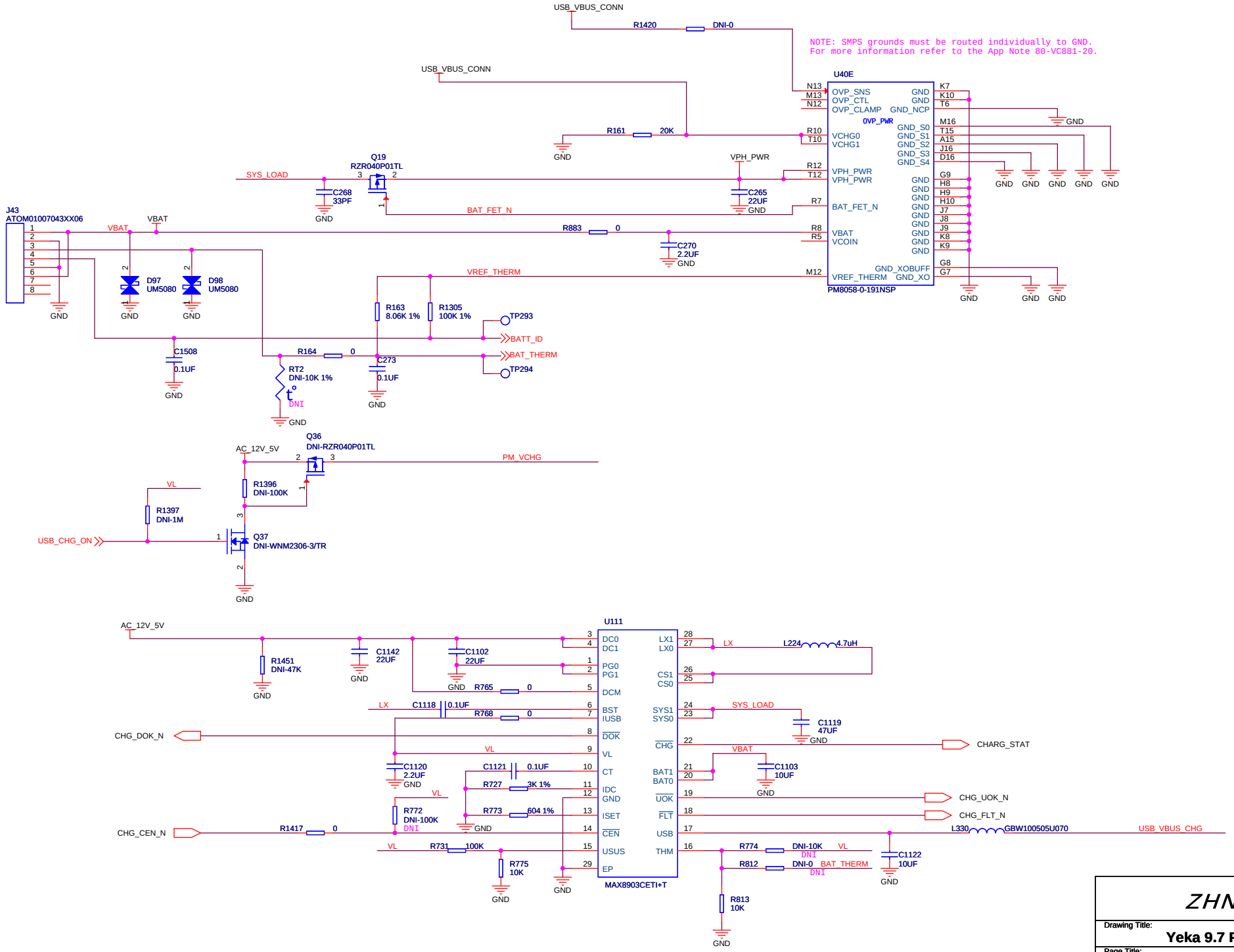

ZHNTD

Drawing Title: **Yeka 9.7 PAD**

Page Title: **PMIC OVP Power**

Size	Document Number	Rev
A3	<Doc>	001

Date: Thursday, December 06, 2012 | Sheet 23 of 35

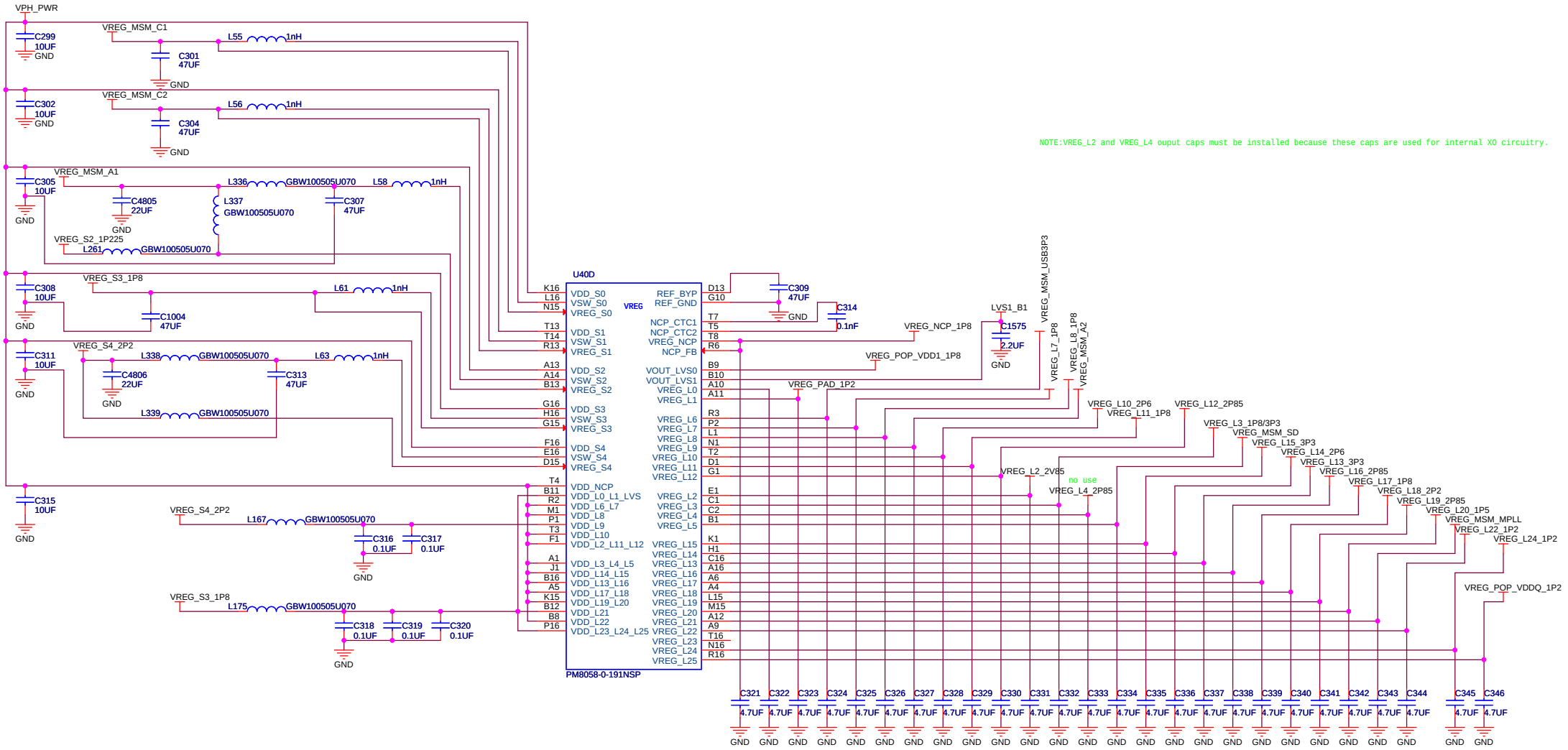

NOTE:VREG_L2 and VREG_L4 ouput caps must be installed because these caps are used for internal XO circuitry.

ZHNTD

Drawing Title: **Yeka 9.7 PAD**

Page Title: **PMIC Regulator**

Size	Document Number	Rev
A3	<Doc>	001

Date: Thursday, December 06, 2012 | Sheet 24 of 35

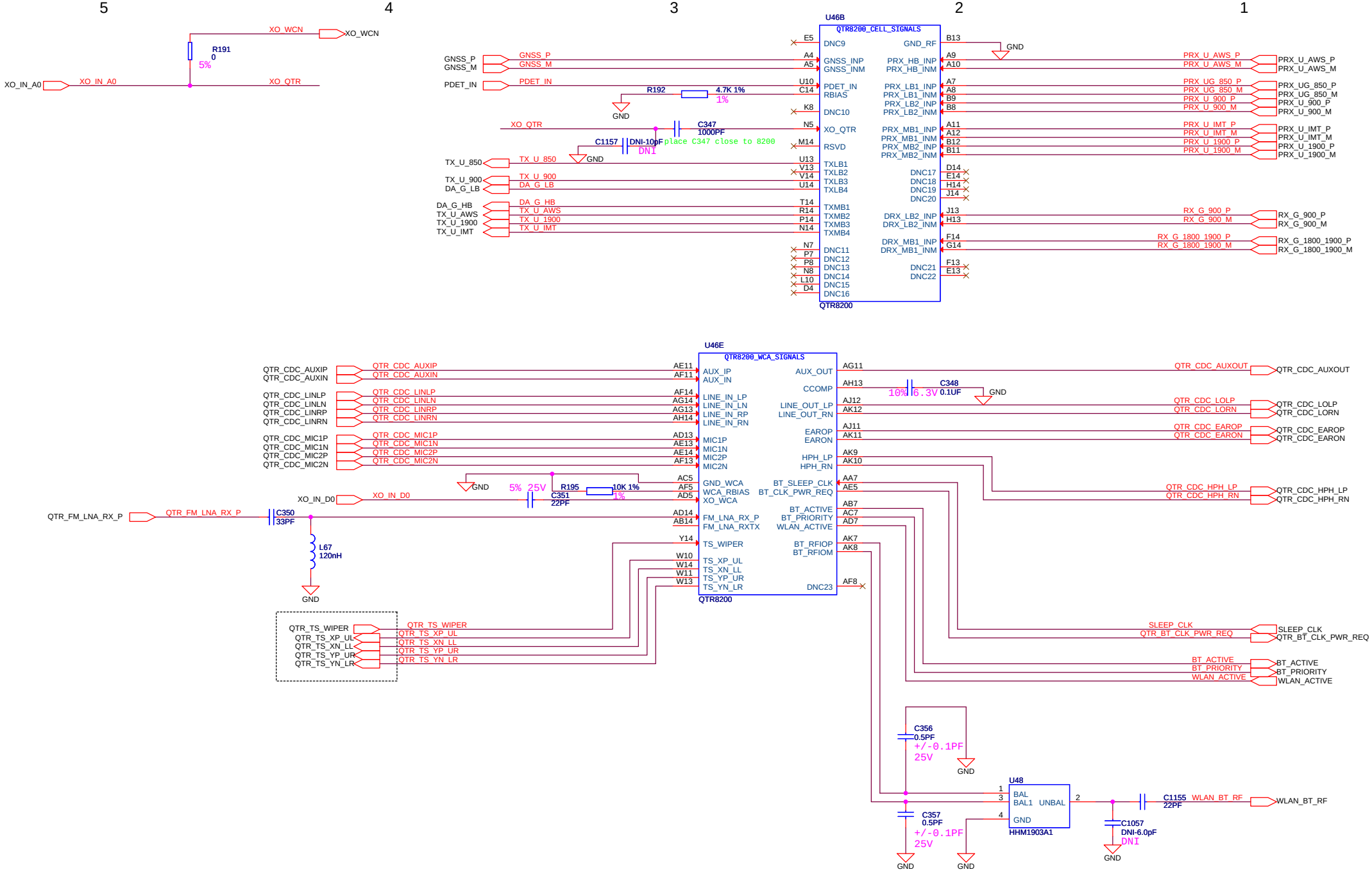

ZHNTD

Drawing Title: **Yeka 9.7 PAD**

Page Title: **QTR8200 RF IN/OUT and WCA (BT/FM/CODEC/TSADC)**

Size	Document Number	Rev
A3	<Doc>	001

Date: Thursday, December 06, 2012 | Sheet 25 of 35

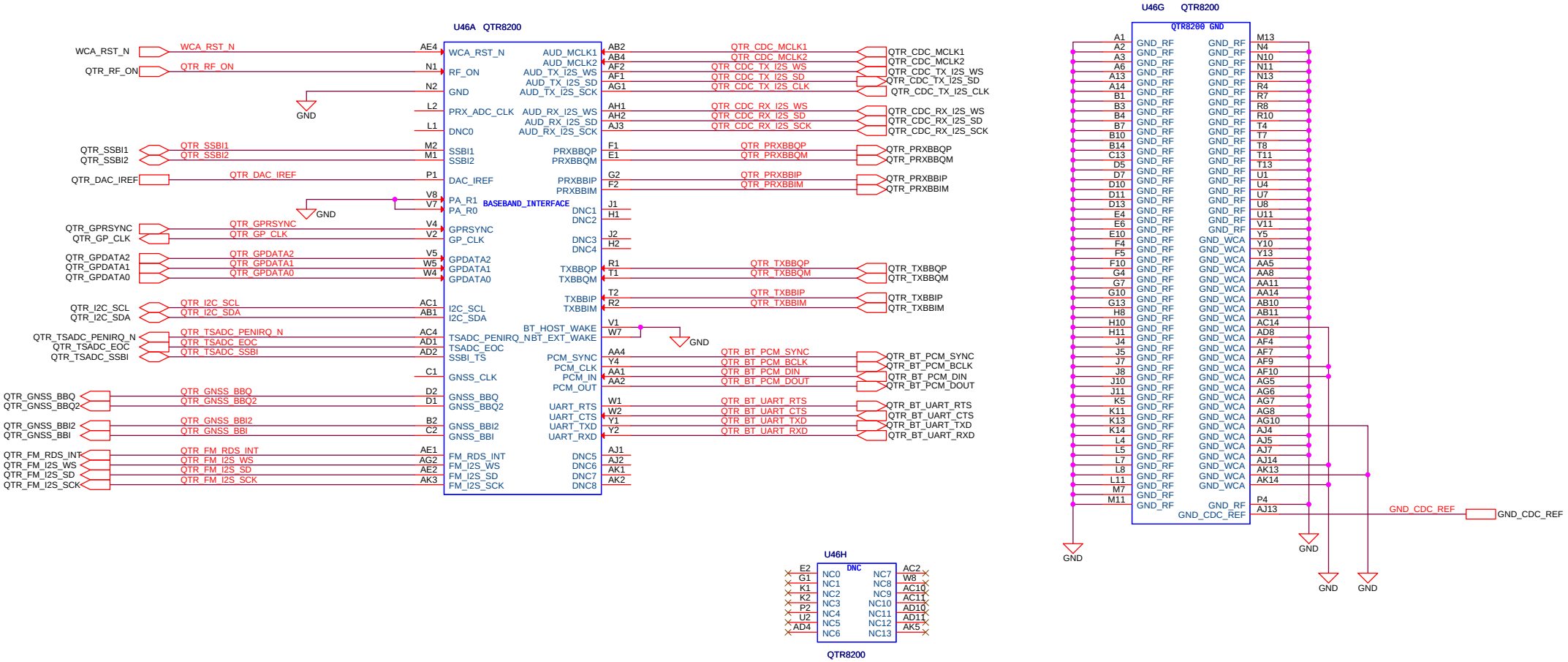

ZHNTD

Drawing Title: **Yeka 9.7 PAD**

Page Title: **QTR8200 BB INTERFACE**

Size	Document Number	Rev
A3	<Doc>	001

Date: Thursday, December 06, 2012 | Sheet 26 of 35

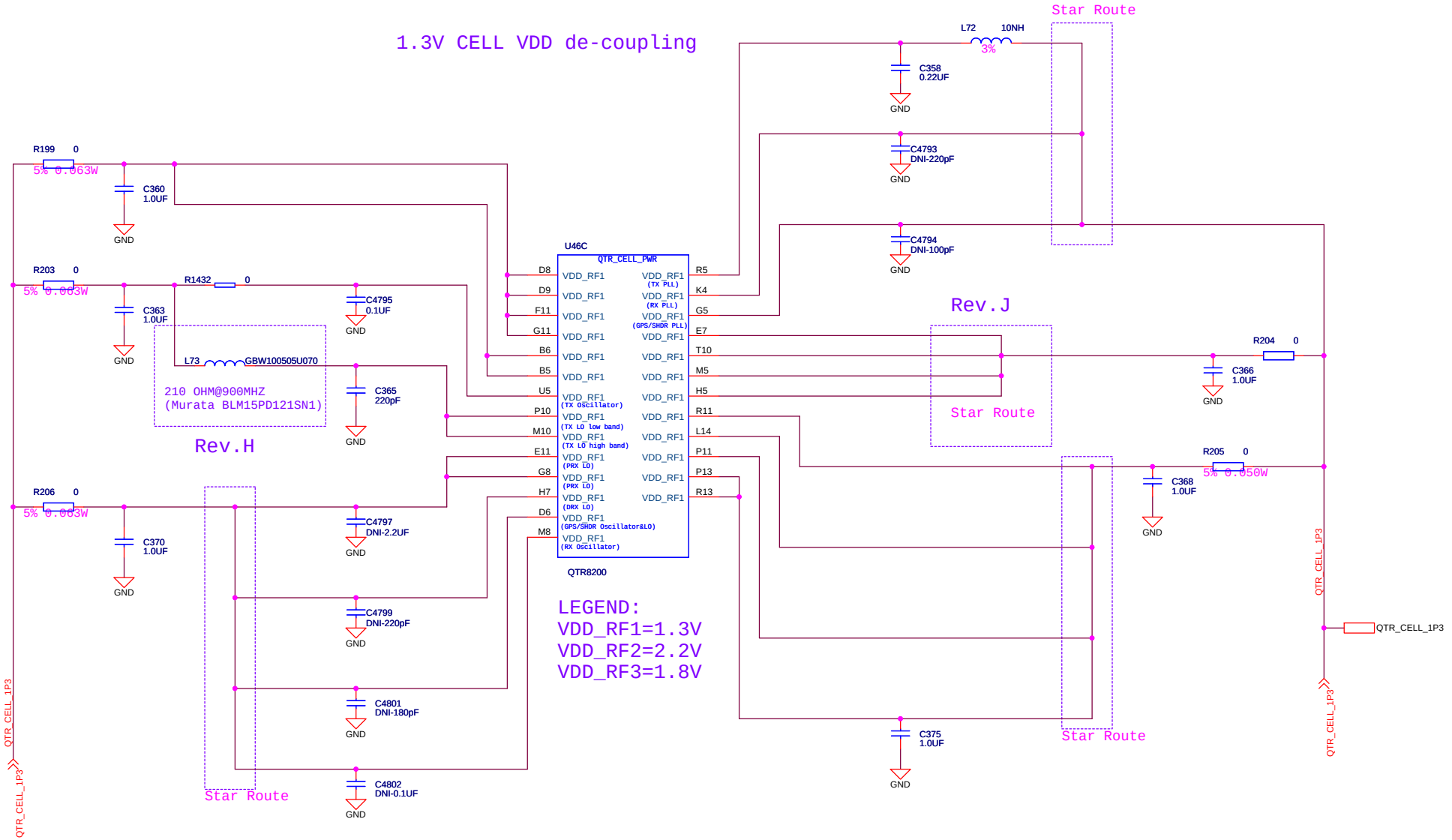

ZHNTD	
Drawing Title:	Yeka 9.7 PAD
Page Title:	QTR8200 RF PWR & DECOUPLING- CELL 1.3V
Size A3	Document Number <Doc> Rev 001
Date: Thursday, December 06, 2012	Sheet 27 of 35

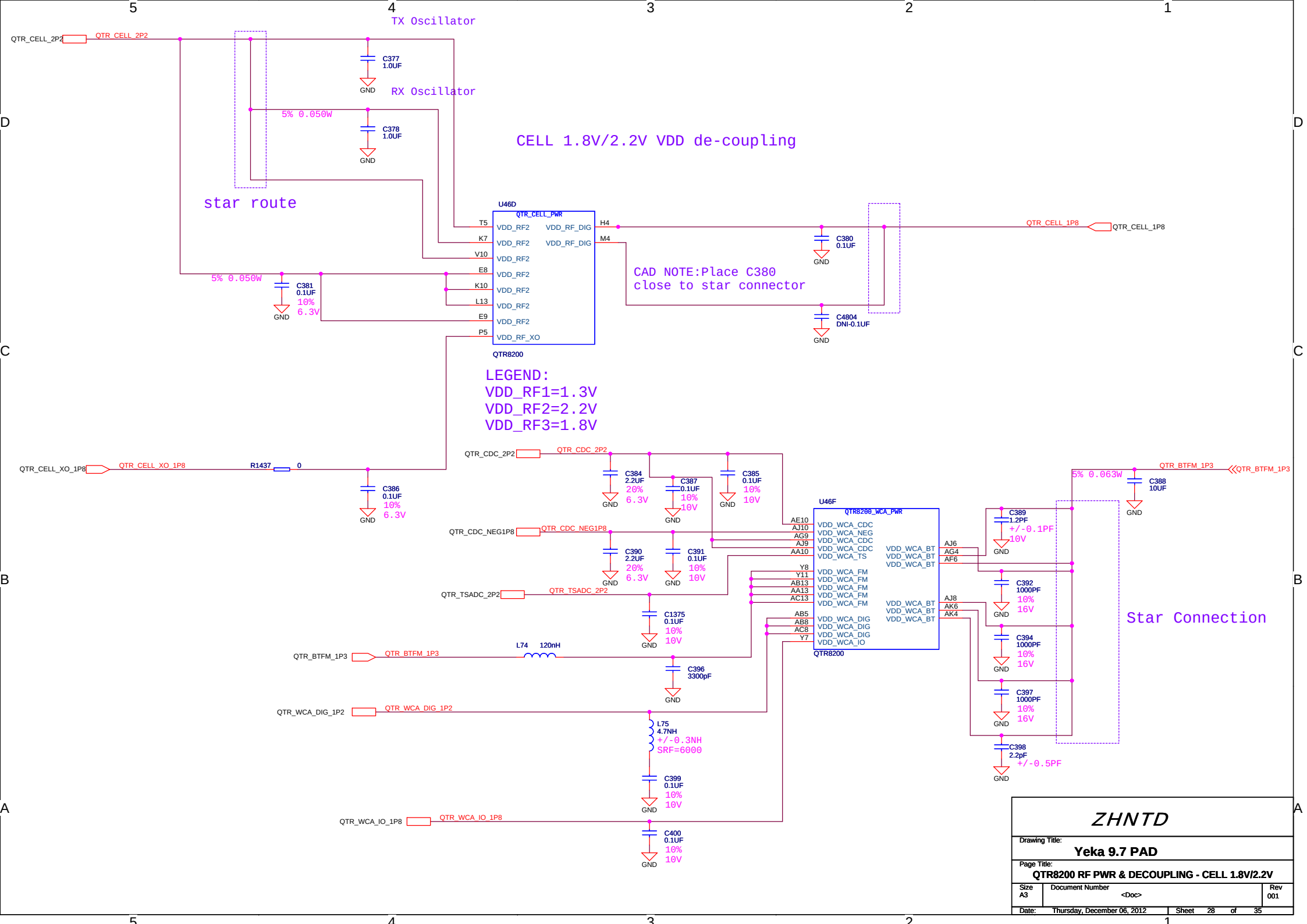
TX Oscillator
RX Oscillator
CELL 1.8V/2.2V VDD de-coupling
star route
U46D
QTR_CELL_PWR
QTR8200
VDD_RF2
VDD_RF_DIG
VDD_RF_XO
CAD NOTE:Place C380
close to star connector
LEGEND:
VDD_RF1=1.3V
VDD_RF2=2.2V
VDD_RF3=1.8V
U46F
QTR8200_WCA_PWR
VDD_WCA_CDC
VDD_WCA_NEG
VDD_WCA_TS
VDD_WCA_FM
VDD_WCA_DIG
VDD_WCA_IO
VDD_WCA_BT
Star Connection
QTR_CELL_2P2
QTR_CELL_1P8
QTR_CELL_XO_1P8
QTR_CDC_2P2
QTR_CDC_NEG1P8
QTR_TSADC_2P2
QTR_BTFM_1P3
QTR_WCA_DIG_1P2
QTR_WCA_IO_1P8
R1437
L74 120nH
L75 4.7NH +/-0.3NH SRF=6000
C377 1.0UF
C378 1.0UF
C380 0.1UF
C381 0.1UF 10% 6.3V
C384 2.2UF 20% 6.3V
C385 0.1UF 10% 10V
C386 0.1UF 10% 6.3V
C387 0.1UF 10% 10V
C388 10UF
C389 1.2PF +/-0.1PF 10V
C390 2.2UF 20% 6.3V
C391 0.1UF 10% 10V
C392 1000PF 10% 16V
C394 1000PF 10% 16V
C397 1000PF 10% 16V
C398 2.2pF +/-0.5PF
C399 0.1UF 10% 10V
C400 0.1UF 10% 10V
C396 3300pF
C1375 0.1UF 10% 10V
C4804 DNI-0.1UF
5% 0.050W
5% 0.063W
GND
ZHNTD
Drawing Title:
Yeka 9.7 PAD
Page Title:
QTR8200 RF PWR & DECOUPLING - CELL 1.8V/2.2V
Size A3
Document Number
<Doc>
Rev 001
Date: Thursday, December 06, 2012
Sheet 28 of 35

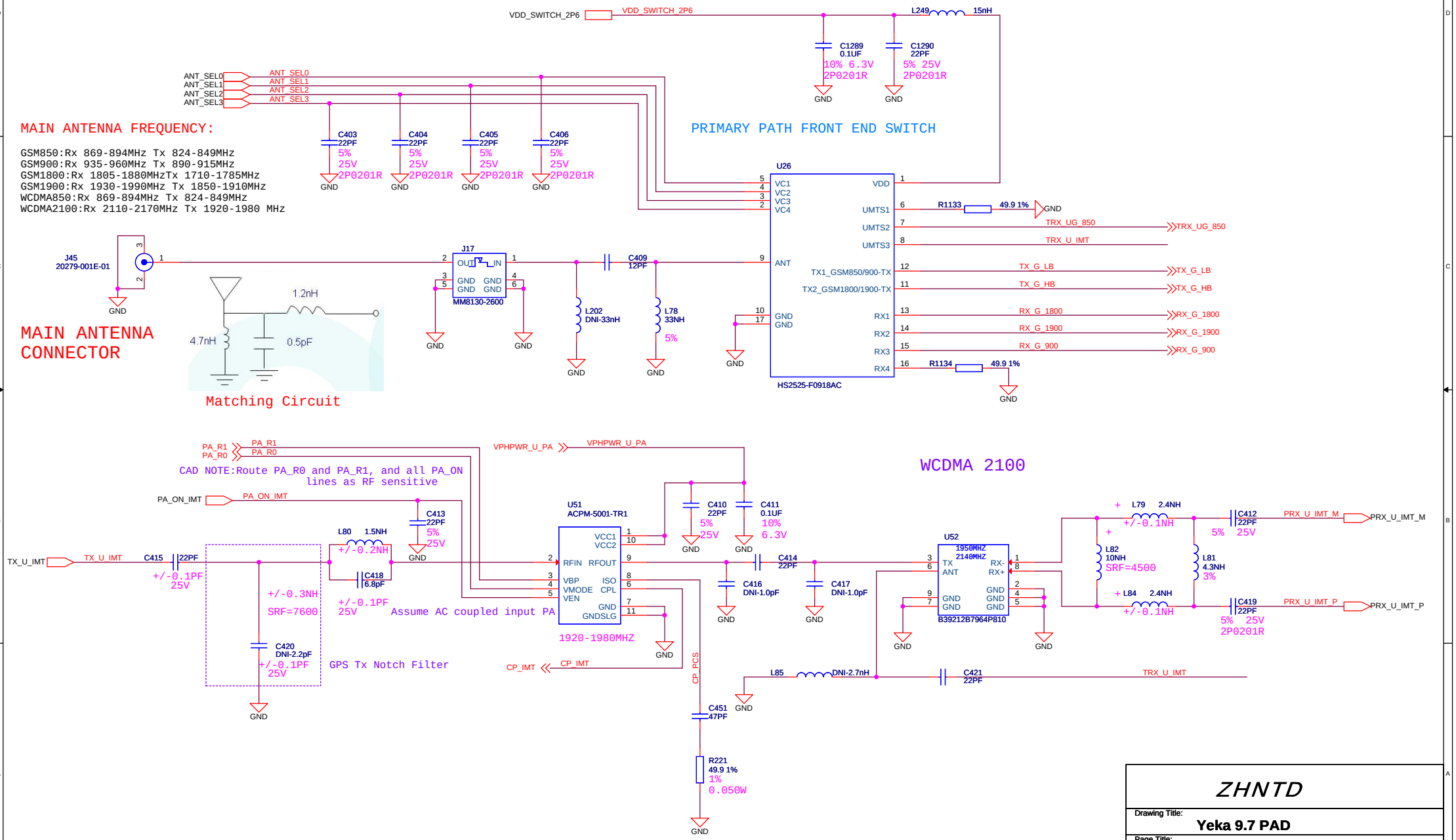

ZHNTD

Drawing Title: **Yeka 9.7 PAD**

Page Title: **PRIMARY PATH FRONT END SWITCH and B1/IMT PA & Duplexer**

Size	Document Number	Rev
A3	<Doc>	001

Date: Tuesday, February 05, 2013 | Sheet 29 of 35

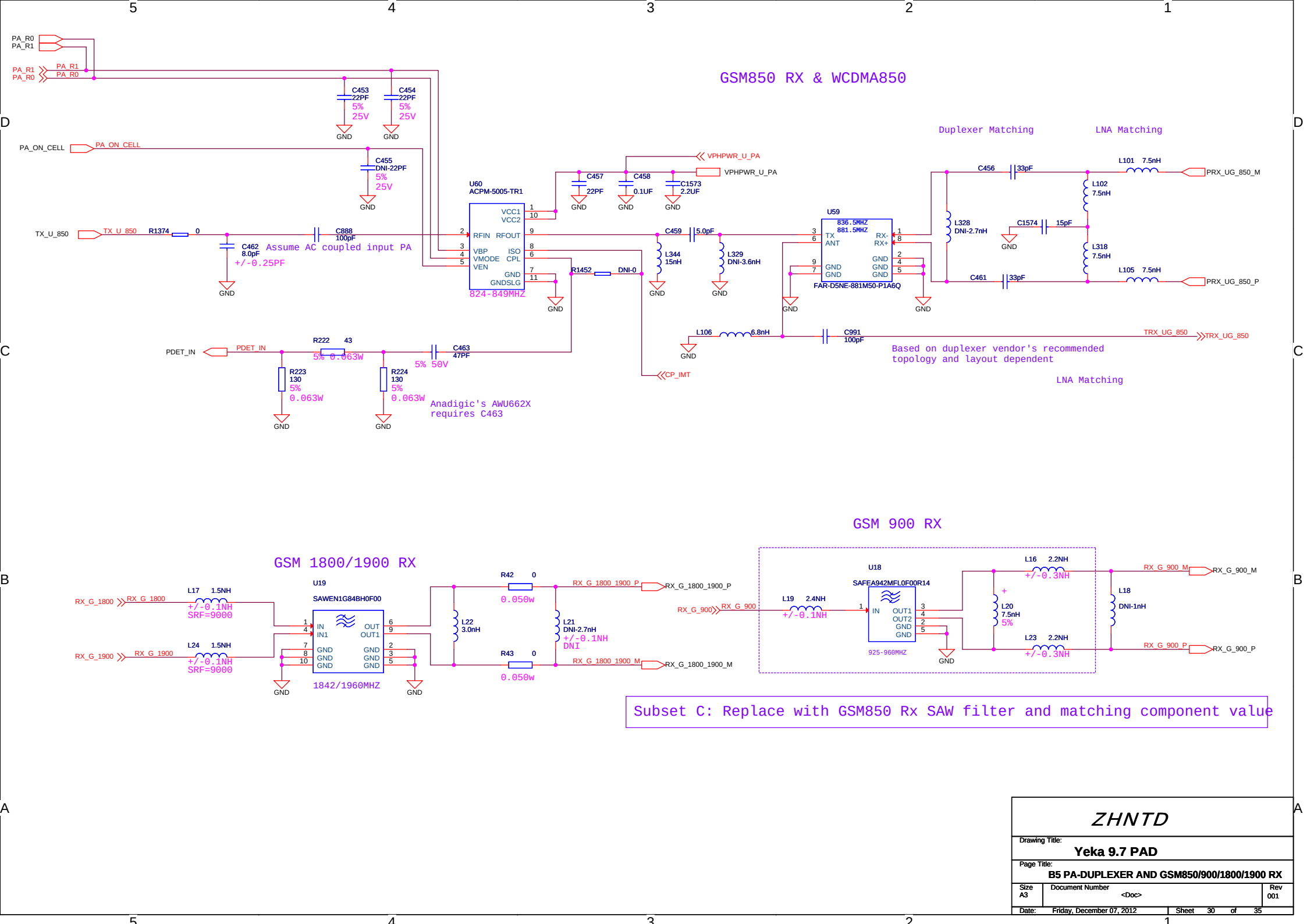
GSM850 RX & WCDMA850
Duplexer Matching
LNA Matching
PA_R0
PA_R1
PA_ON_CELL
TX_U_850
PDET_IN
C453 22PF 5% 25V
C454 22PF 5% 25V
C455 DNI-22PF 5% 25V
R1374 0
C462 8.0pF +/-0.25PF
Assume AC coupled input PA
C888 100pF
U60 ACPM-5005-TR1
VCC1 VCC2 RFIN RFOUT VBP ISO VMODE CPL VEN GND GNDSLG
824-849MHZ
C457 22PF
C458 0.1UF
C1573 2.2UF
VPHPWR_U_PA
R1452 DNI-0
CP_IMT
C459 5.0pF
L344 15nH
L329 DNI-3.6nH
U59
836.5MHZ 881.5MHZ
TX ANT RX- RX+ GND GND GND GND GND
FAR-D5NE-881M50-P1A6Q
L328 DNI-2.7nH
C456 33pF
C461 33pF
C1574 15pF
L101 7.5nH
L102 7.5nH
L318 7.5nH
L105 7.5nH
PRX_UG_850_M
PRX_UG_850_P
L106 6.8nH
C991 100pF
TRX_UG_850
Based on duplexer vendor's recommended topology and layout dependent
LNA Matching
R222 43 5% 0.063W
C463 47PF 5% 50V
R223 130 5% 0.063W
R224 130 5% 0.063W
Anadigic's AWU662X requires C463
GSM 1800/1900 RX
RX_G_1800
RX_G_1900
L17 1.5NH +/-0.1NH SRF=9000
L24 1.5NH +/-0.1NH SRF=9000
U19
SAWEN1G84BH0F00
IN IN1 OUT OUT1 GND GND GND GND GND GND
1842/1960MHZ
L22 3.0nH
L21 DNI-2.7nH +/-0.1NH DNI
R42 0 0.050w
R43 0 0.050w
RX_G_1800_1900_P
RX_G_1800_1900_M
GSM 900 RX
RX_G_900
L19 2.4NH +/-0.1NH
U18
SAFEA942MFL0F00R14
IN OUT1 OUT2 GND GND
925-960MHZ
L16 2.2NH +/-0.3NH
L20 7.5NH 5%
L23 2.2NH +/-0.3NH
L18 DNI-1nH
RX_G_900_M
RX_G_900_P
Subset C: Replace with GSM850 Rx SAW filter and matching component value
ZHNTD
Drawing Title: Yeka 9.7 PAD
Page Title: B5 PA-DUPLEXER AND GSM850/900/1800/1900 RX
Size A3
Document Number <Doc>
Rev 001
Date: Friday, December 07, 2012
Sheet 30 of 35

GSM TX(850 900 1800 1900)

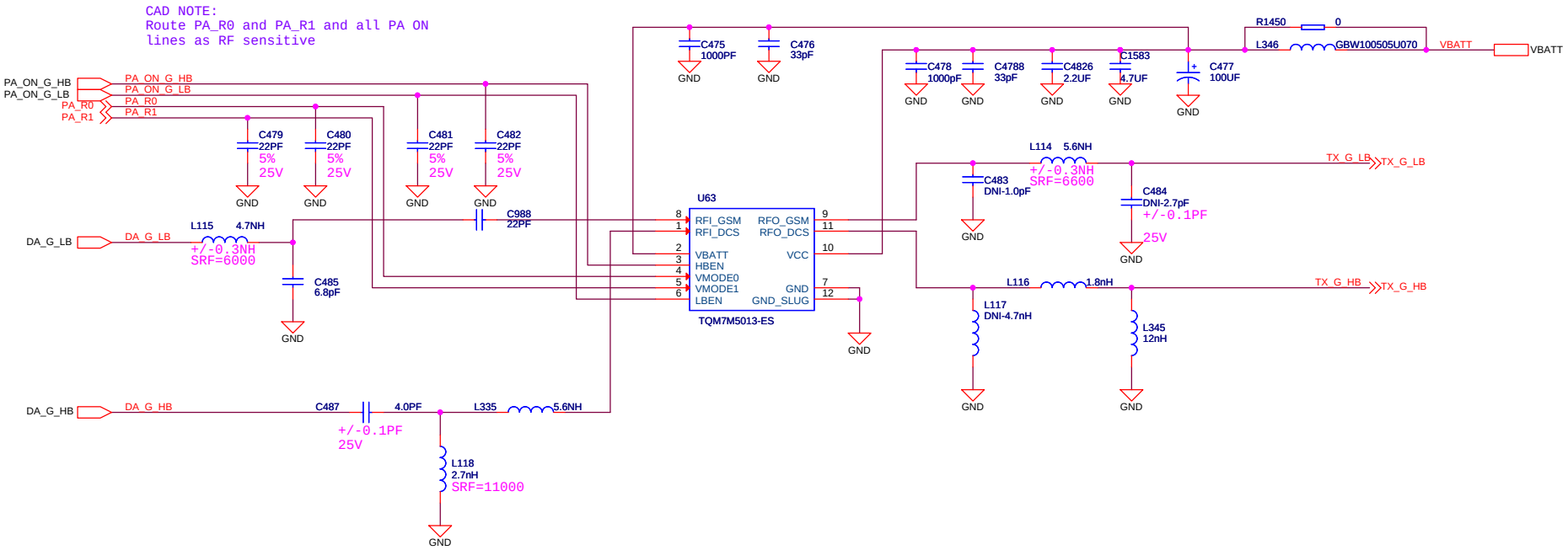

ZHNTD	
Drawing Title:	Yeka 9.7 PAD
Page Title:	GSM QBAND LINEAR PA
Size A3	Document Number <Doc> Rev 001
Date: Thursday, December 06, 2012	Sheet 31 of 35

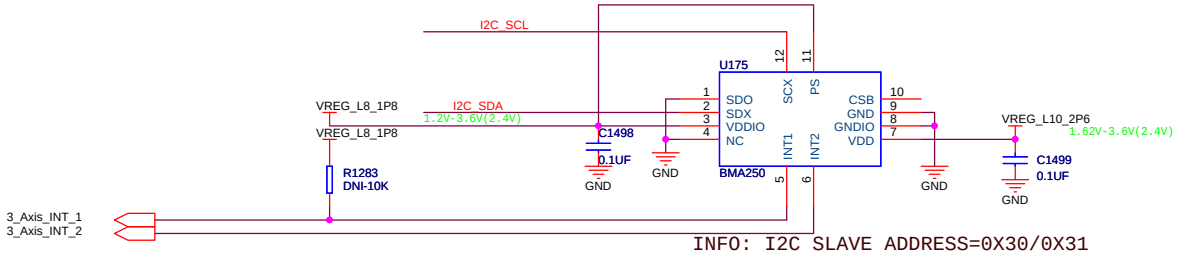

INFO: I2C SLAVE ADDRESS=0X30/0X31

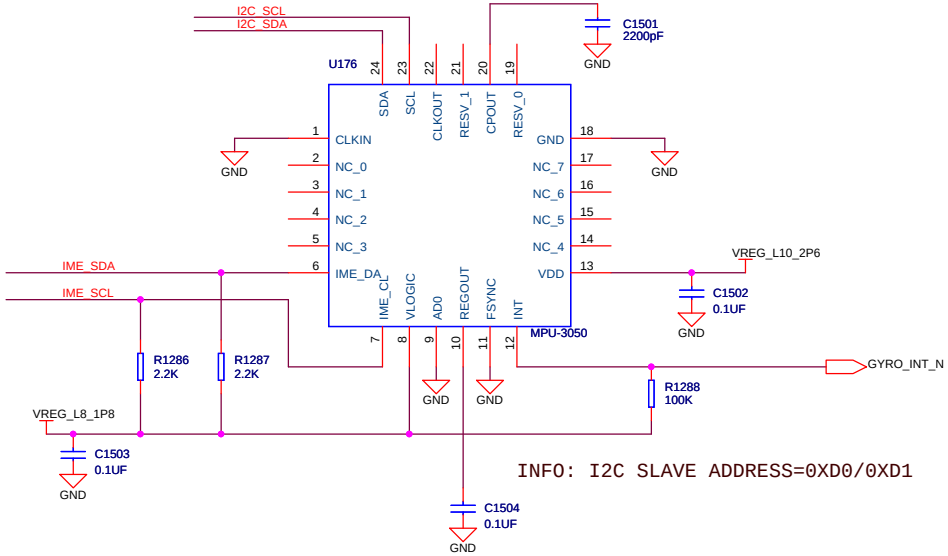

INFO: I2C SLAVE ADDRESS=0XD0/0XD1

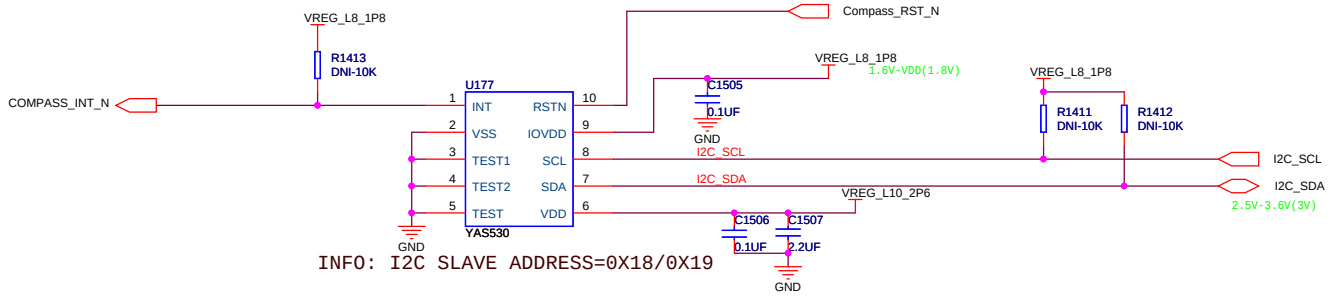

INFO: I2C SLAVE ADDRESS=0X18/0X19

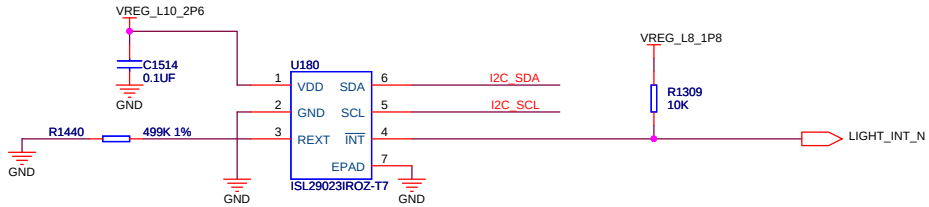

INFO: I2C SLAVE ADDRESS=0X88/0X89

ZHNTD

Drawing Title: **Yeka 9.7 PAD**

Page Title: **COMPASS and Acceleration Senssor**

Size	Document Number	Rev
A3	<Doc>	001

Date: Thursday, December 06, 2012 | Sheet 32 of 35

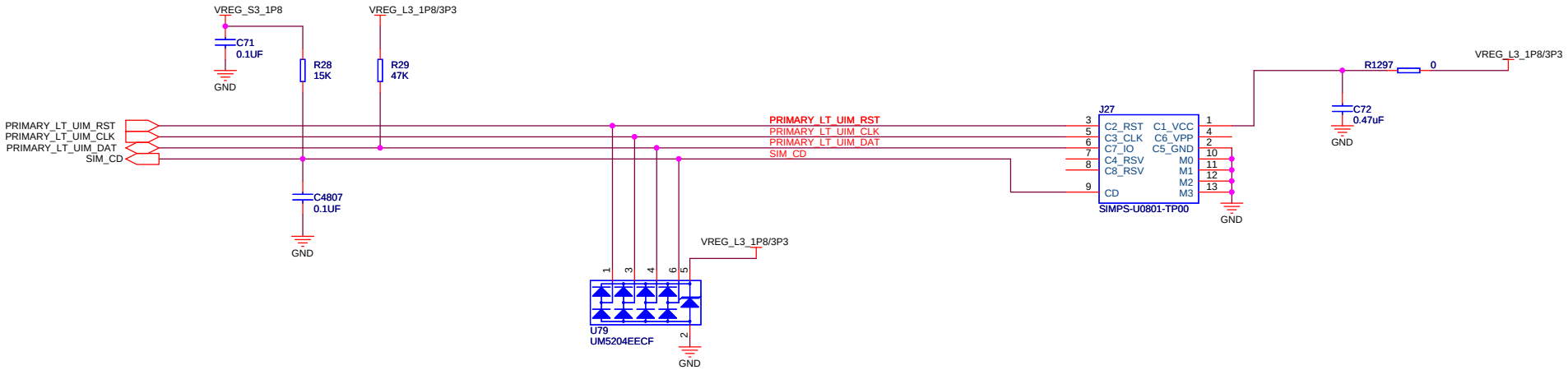

ZHNTD

Drawing Title: **Yeka 9.7 PAD**

Page Title: **SIM Card interface**

Size	Document Number	Rev
A3	<Doc>	001

Date: Friday, December 07, 2012 | Sheet 33 of 35

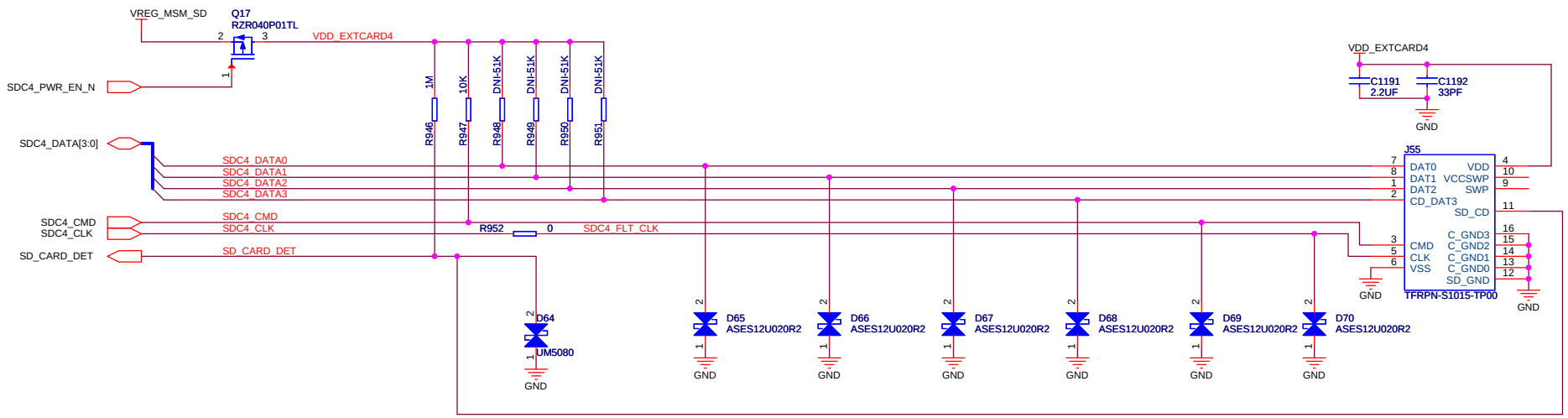

ZHNTD

Drawing Title: **Yeka 9.7 PAD**

Page Title: **T-Flash Connector**

Size	Document Number	Rev
A3	<Doc>	001

Date: Thursday, December 06, 2012 | Sheet 34 of 35

WIFI ANTENNA FREQUENCY: 2412MHz-2462MHz
BT ANTENNA FREQUENCY: 2402MHz-2480MHz

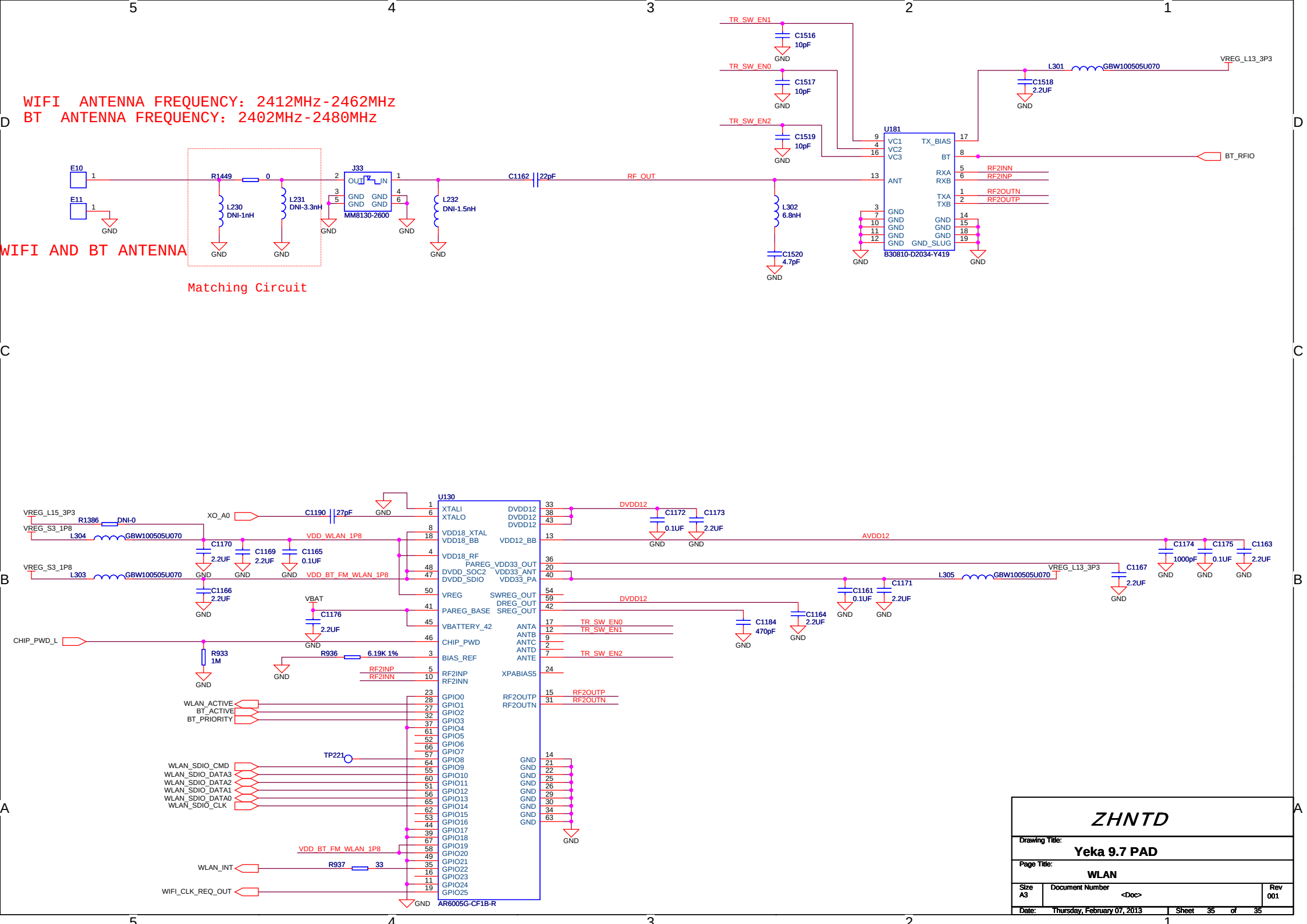

ZHNTD	
Drawing Title:	Yeka 9.7 PAD
Page Title:	WLAN
Size A3	Document Number <Doc>
Rev 001	
Date: Thursday, February 07, 2013	Sheet 35 of 35