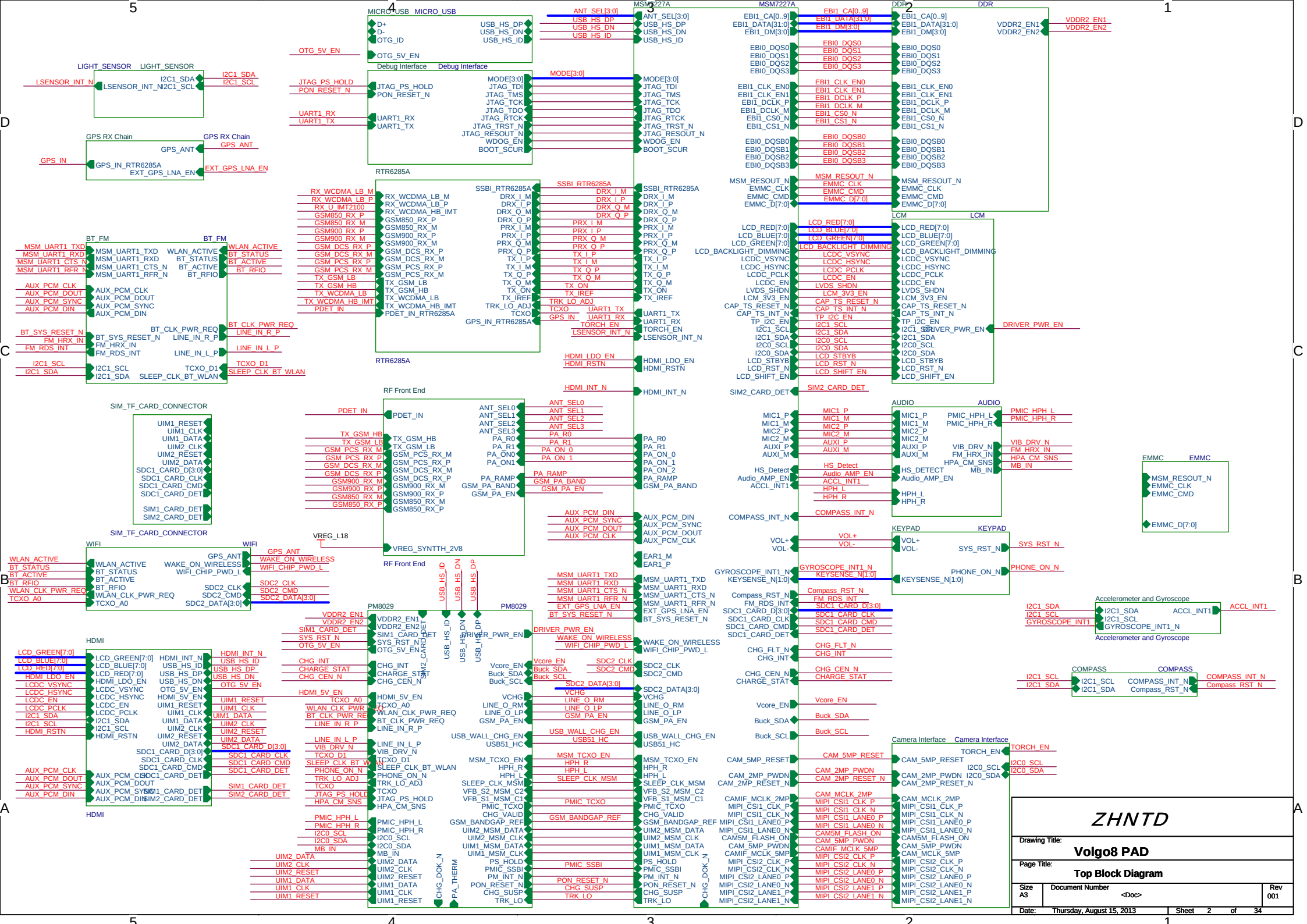
MICRO_USB
Debug Interface
LIGHT_SENSOR
GPS RX Chain
RTR6285A
BT_FM
SIM_TF_CARD_CONNECTOR
WIFI
RF Front End
PM8029
HDMI
MSM7227A
DDR
LCM
AUDIO
KEYPAD
EMMC
Accelerometer and Gyroscope
COMPASS
Camera Interface
ZHNTD
Drawing Title:
Volgo8 PAD
Page Title:
Top Block Diagram
Size
A3
Document Number
<Doc>
Rev
001
Date:
Thursday, August 15, 2013
Sheet
2
of
34

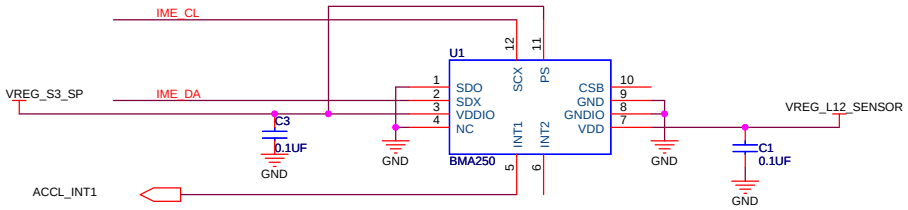

INFO: I2C SLAVE ADDRESS=0X30/0X31

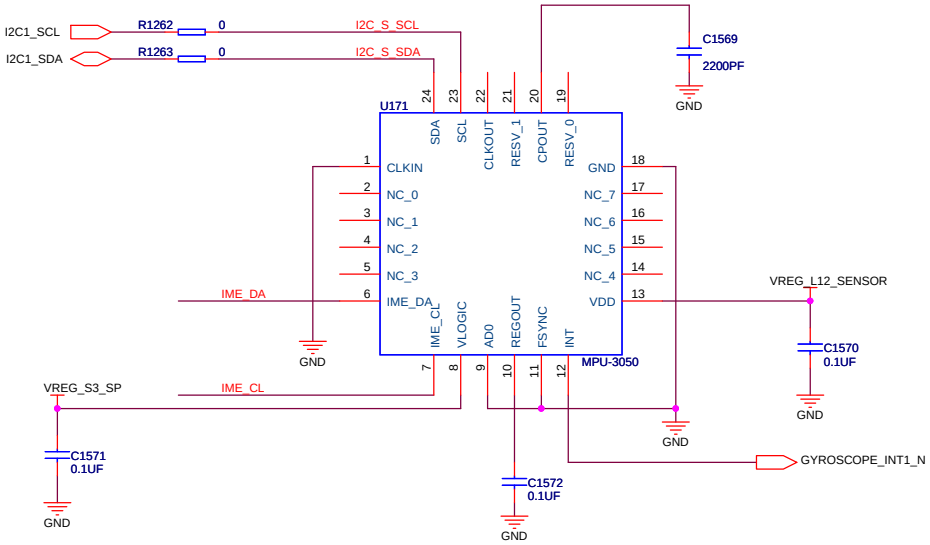

INFO: I2C SLAVE ADDRESS=0XD0/0XD1

ZHNTD

Drawing Title: **Volgo8 PAD**

Page Title: **Acceleration and Gyroscope Sensor**

Size	Document Number	Rev
A3	<Doc>	001

Date: Friday, March 01, 2013 | Sheet 3 of 34

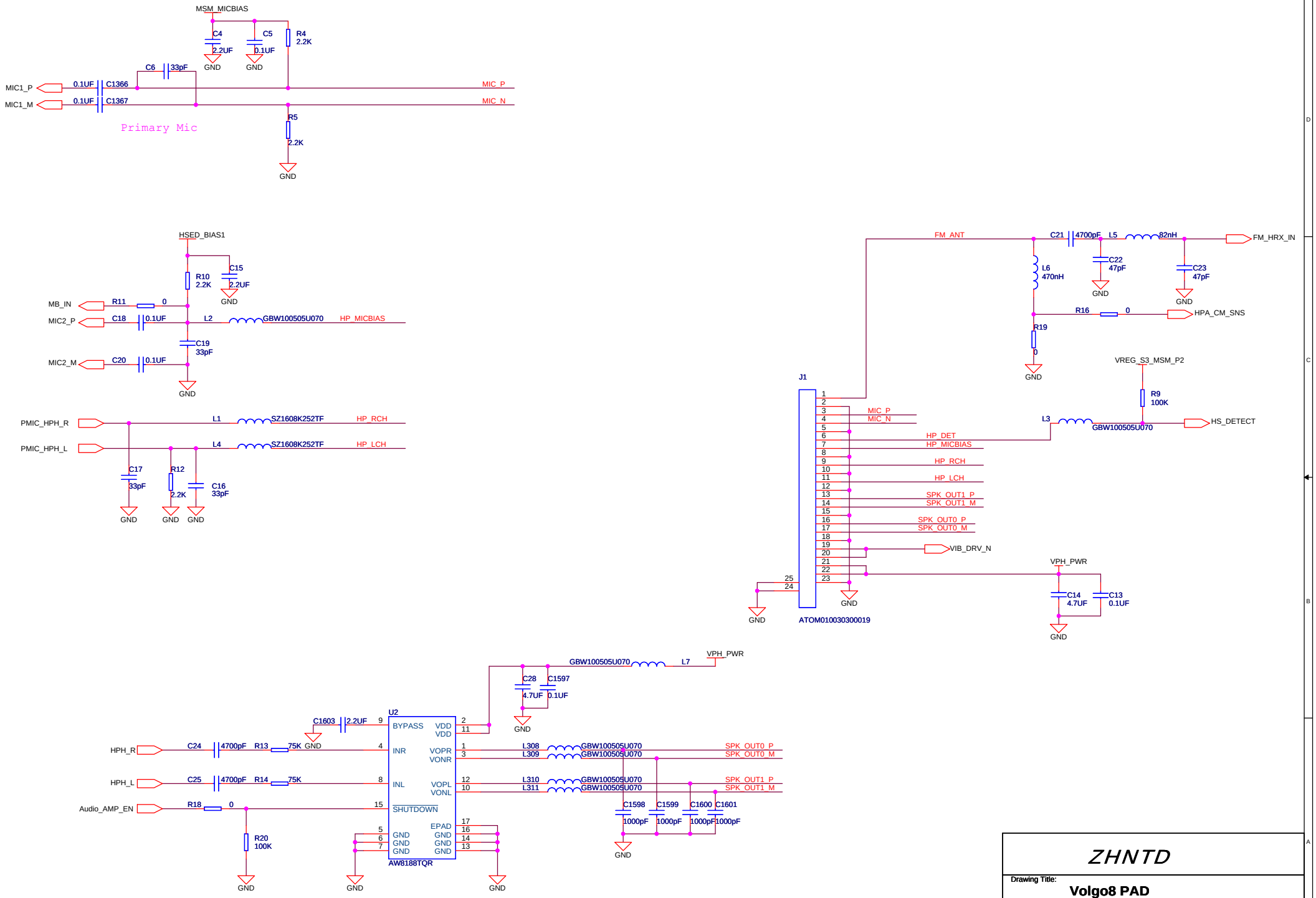

ZHNTD

Drawing Title: **Volgo8 PAD**

Page Title: **Audio Interface**

Size	Document Number	Rev
A3	<Doc>	001

Date: Friday, March 01, 2013 Sheet 4 of 34

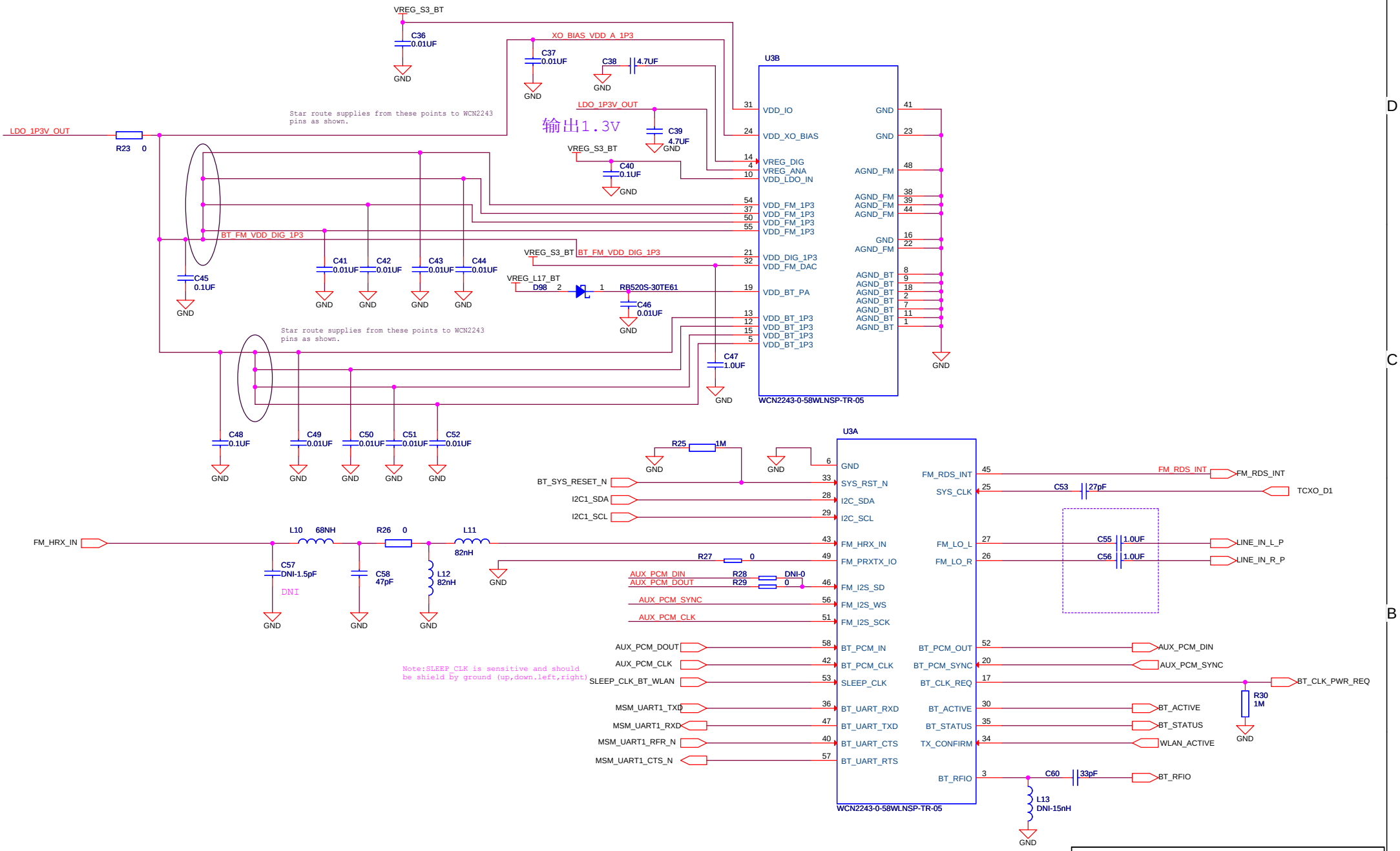

ZHNTD

Drawing Title: **Volgo8 PAD**

Page Title: **BT and FM**

Size	Document Number	Rev
A3	<Doc>	001

Date: Friday, March 01, 2013 | Sheet 5 of 34

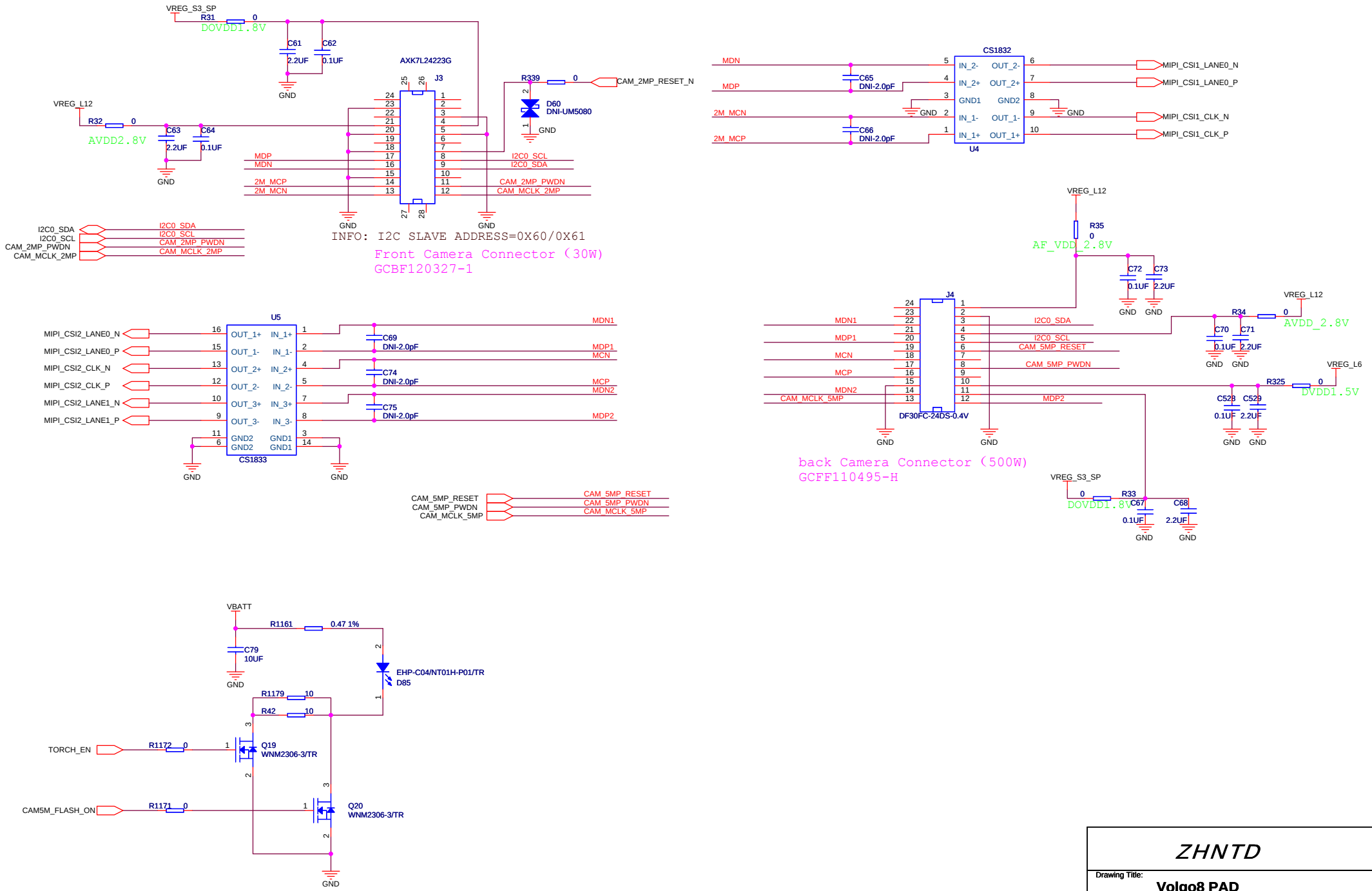

ZHNTD

Drawing Title: **Volgo8 PAD**

Page Title: **Camera Interface**

Size	Document Number	Rev
A3	<Doc>	001

Date: Friday, March 01, 2013 | Sheet 6 of 34

NOTES: eCOMPASS SHOULD BE PLACED
FAR FROM METAL AND MAGENATIC PARTS

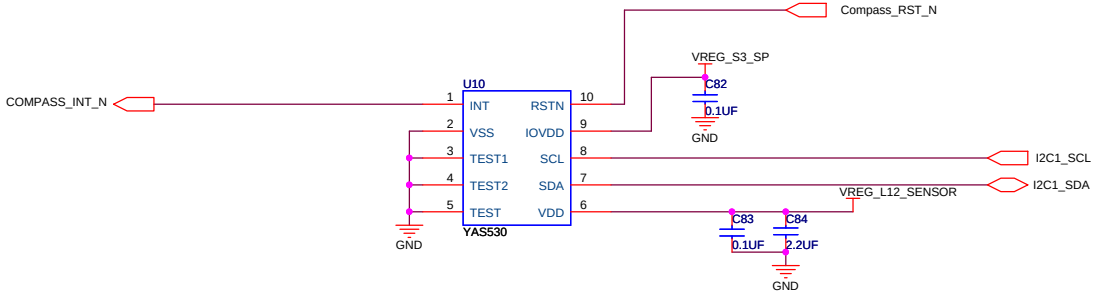

INFO: I2C SLAVE ADDRESS=0X18/0X19

ZHNTD

Drawing Title: **Volgo8 PAD**

Page Title: **Magnetic Fileld Senssor**

Size	Document Number	Rev
A3	<Doc>	001

Date: Friday, March 01, 2013 | Sheet 7 of 34

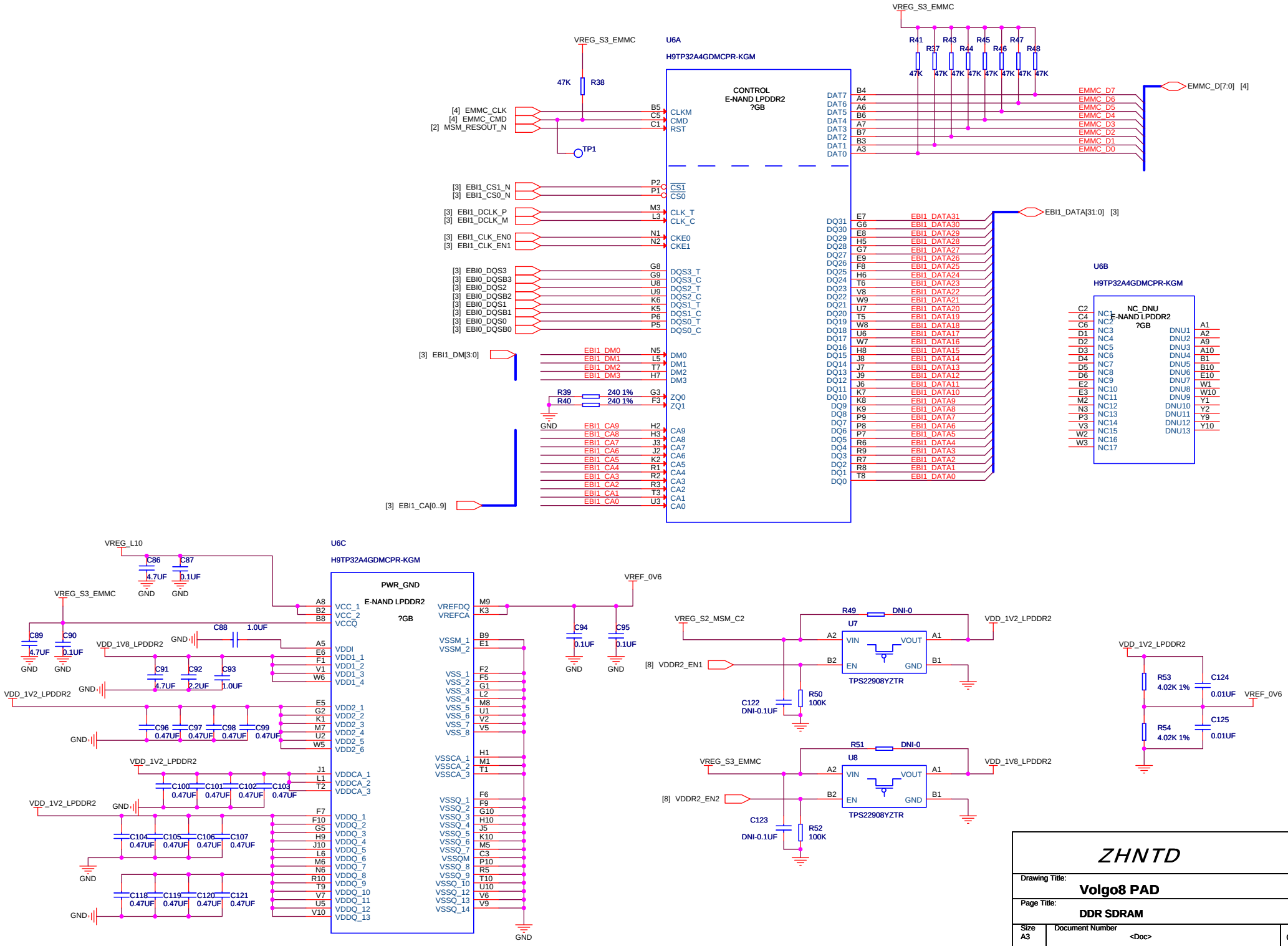

ZHNTD

Drawing Title: **Volgo8 PAD**

Page Title: **DDR SDRAM**

Size	Document Number	Rev
A3	<Doc>	001

Date: Friday, March 01, 2013 | Sheet 8 of 34

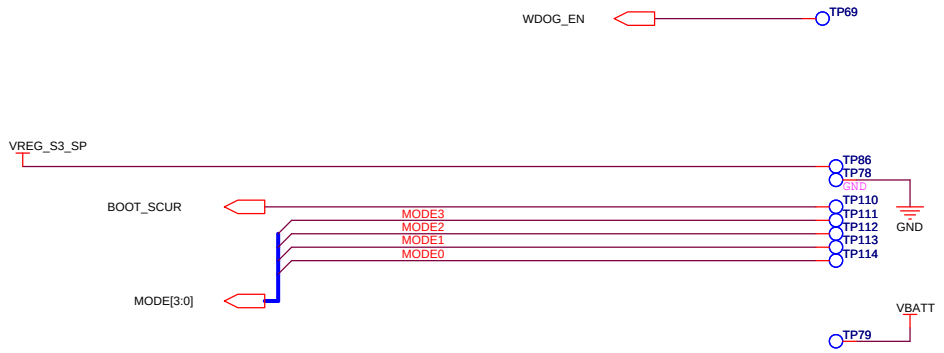

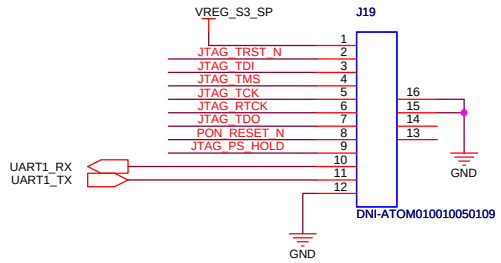

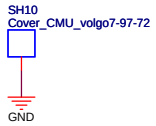

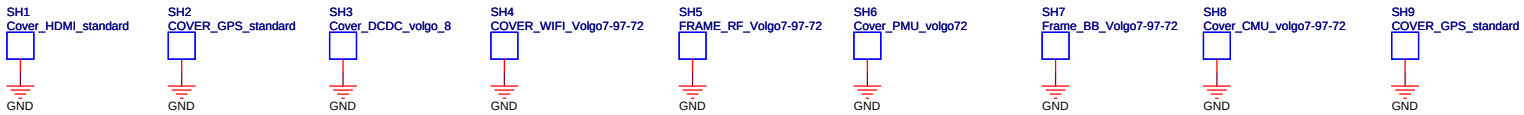

ZHNTD

Drawing Title: **Volgo8 PAD**

Page Title: **Debug Interface**

Size	Document Number	Rev
A3	<Doc>	100

Date: Friday, March 01, 2013 | Sheet 9 of 34

ZHNTD

Drawing Title:
Volgo8 PAD

Page Title:
INAND Flash

Size	Document Number	Rev
A3	<Doc>	001

Date: Friday, March 01, 2013 | Sheet 10 of 34

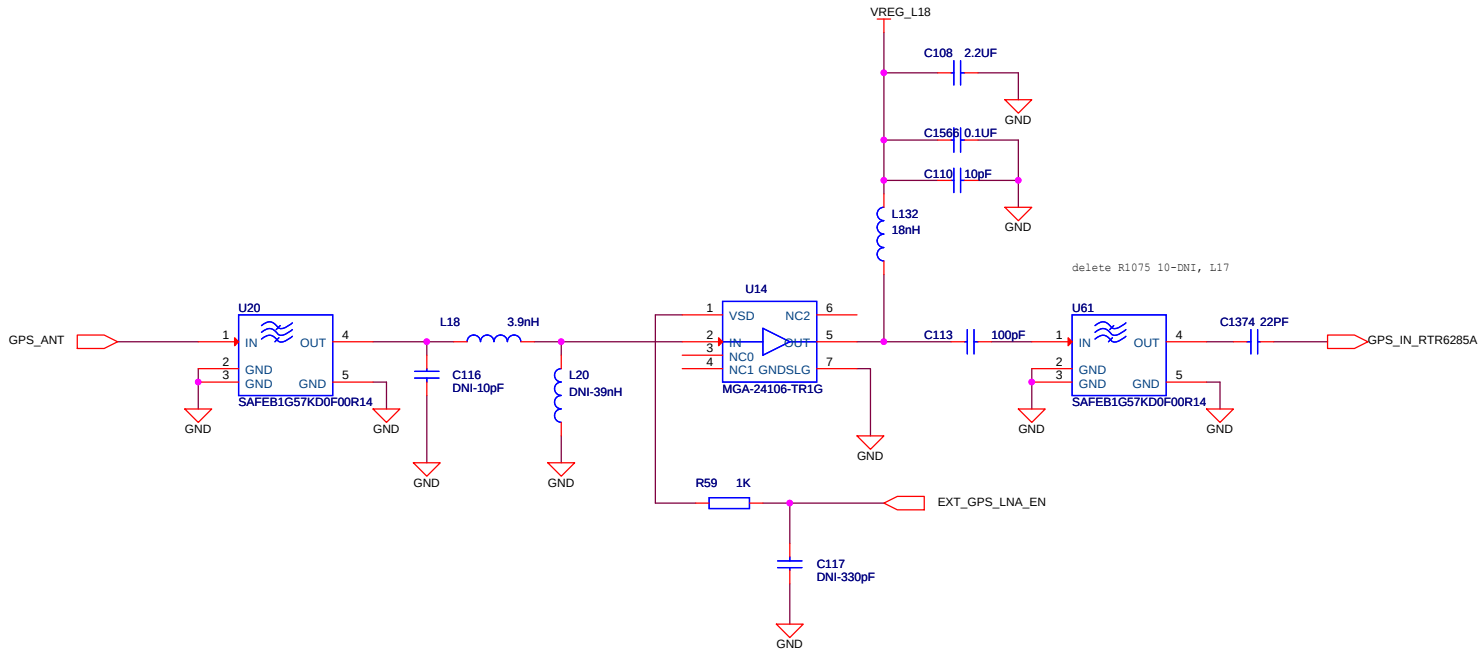

ZHNTD

Drawing Title: **Volgo8 PAD**

Page Title: **GPS Front End**

Size	Document Number	Rev
A3	<Doc>	001

Date: Friday, March 01, 2013 | Sheet 11 of 34

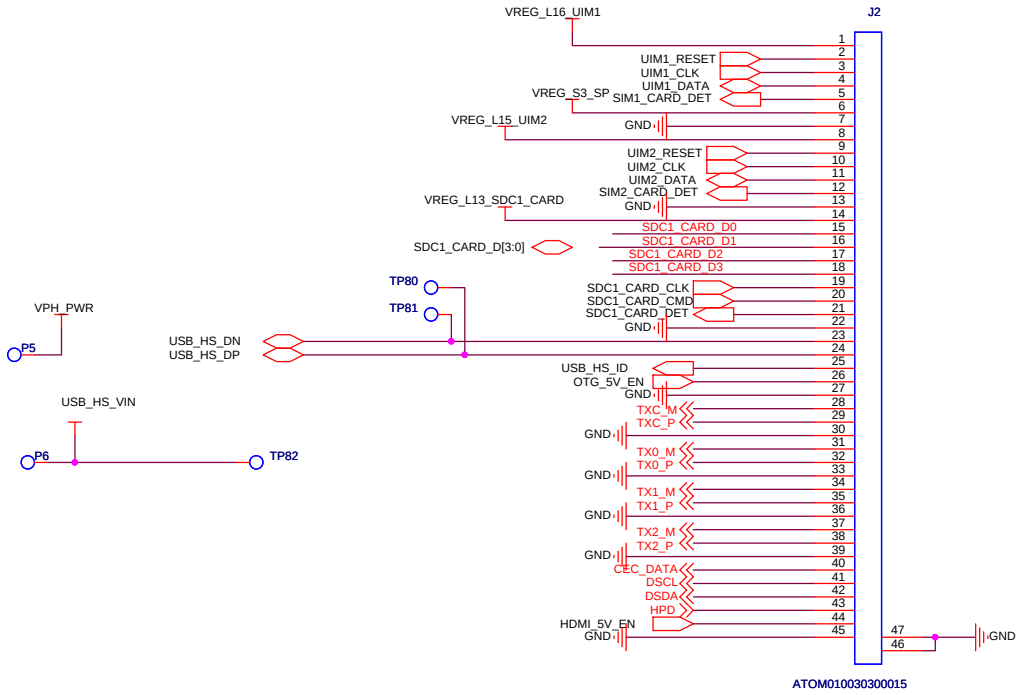

ZHNTD

Drawing Title: **Volgo8 PAD**

Page Title: **HDMI Interface**

Size	Document Number	Rev
A3	<Doc>	001

Date: Friday, March 01, 2013 | Sheet 12 of 34

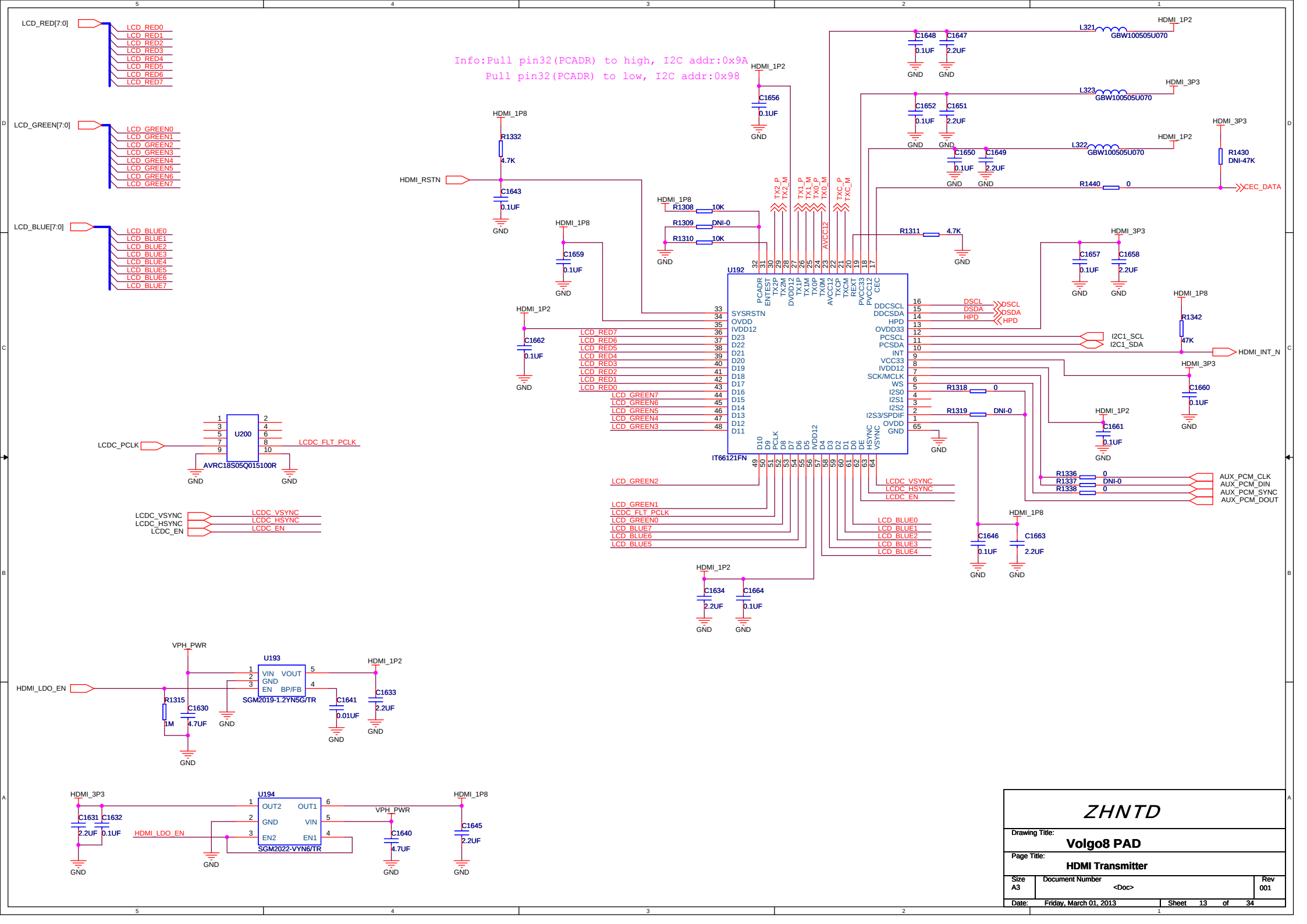
Info:Pull pin32(PCADR) to high, I2C addr:0x9A
Pull pin32(PCADR) to low, I2C addr:0x98
LCD_RED[7:0]
LCD_GREEN[7:0]
LCD_BLUE[7:0]
U192
IT66121FN
U200
AVRC18S05Q015100R
U193
SGM2019-1.2YN5G/TR
U194
SGM2022-VYN6/TR
HDMI_RSTN
HDMI_LDO_EN
LCDC_PCLK
LCDC_FLT_PCLK
LCDC_VSYNC
LCDC_HSYNC
LCDC_EN
CEC_DATA
HDMI_INT_N
AUX_PCM_CLK
AUX_PCM_DIN
AUX_PCM_SYNC
AUX_PCM_DOUT
I2C1_SCL
I2C1_SDA
DSCL
DSDA
HPD
VPH_PWR
GND
ZHNTD
Drawing Title:
Volgo8 PAD
Page Title:
HDMI Transmitter
Size
A3
Document Number
<Doc>
Rev
001
Date:
Friday, March 01, 2013
Sheet 13 of 34

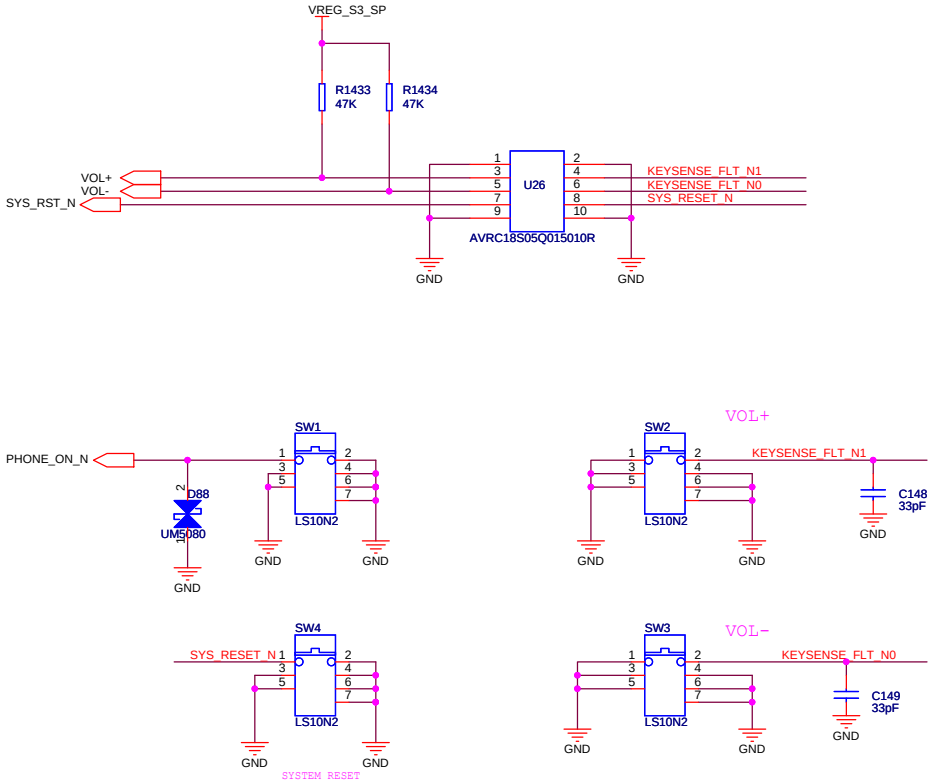

ZHNTD

Drawing Title: **Volgo8 PAD**

Page Title: **Keypad**

Size	Document Number	Rev
A3	<Doc>	001

Date: Friday, March 01, 2013 | Sheet 14 of 34

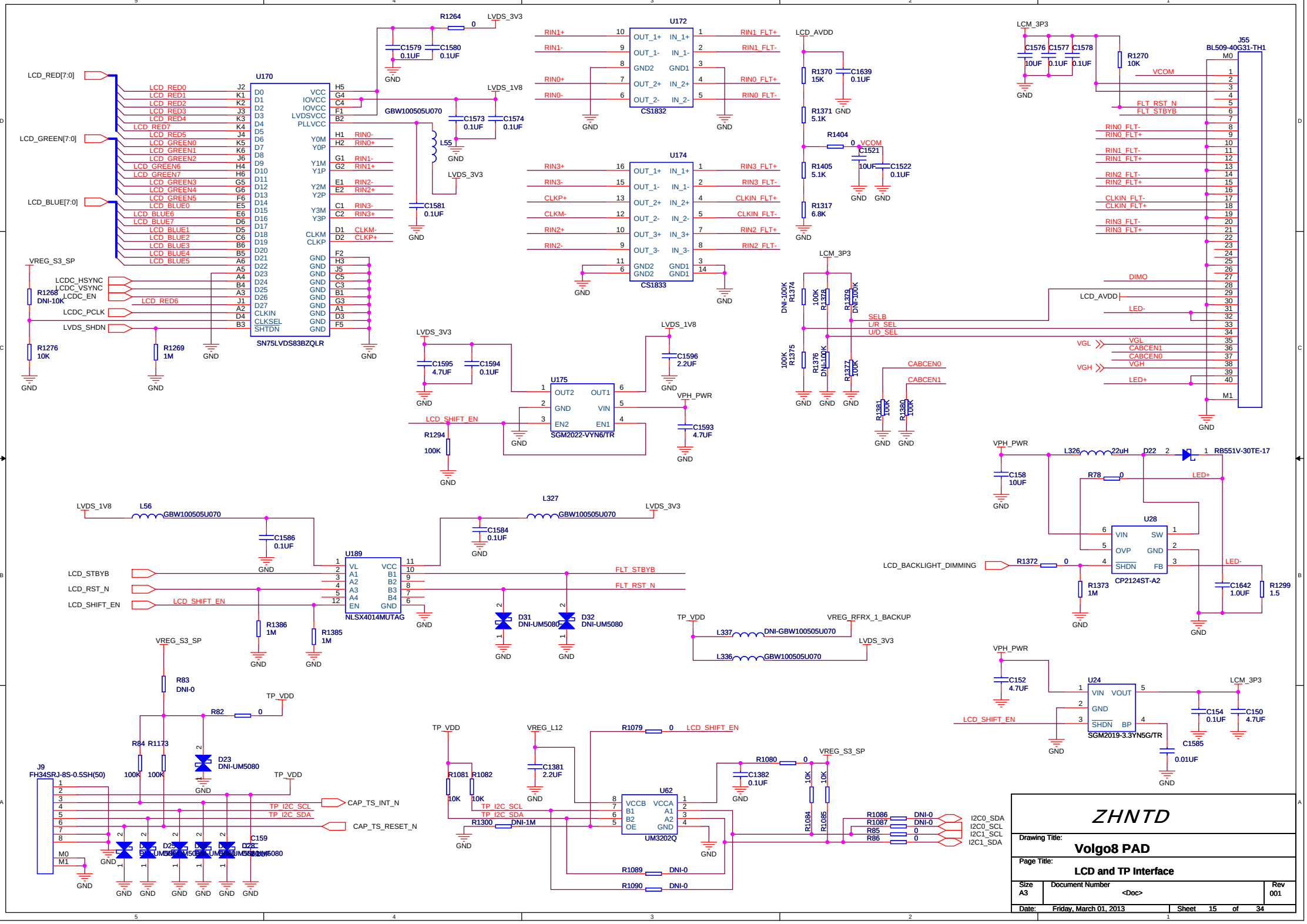

ZHNTD

Drawing Title: Volgo8 PAD

Page Title: LCD and TP Interface

Size	Document Number	Rev
A3	<Doc>	001

Date: Friday, March 01, 2013 Sheet 15 of 34

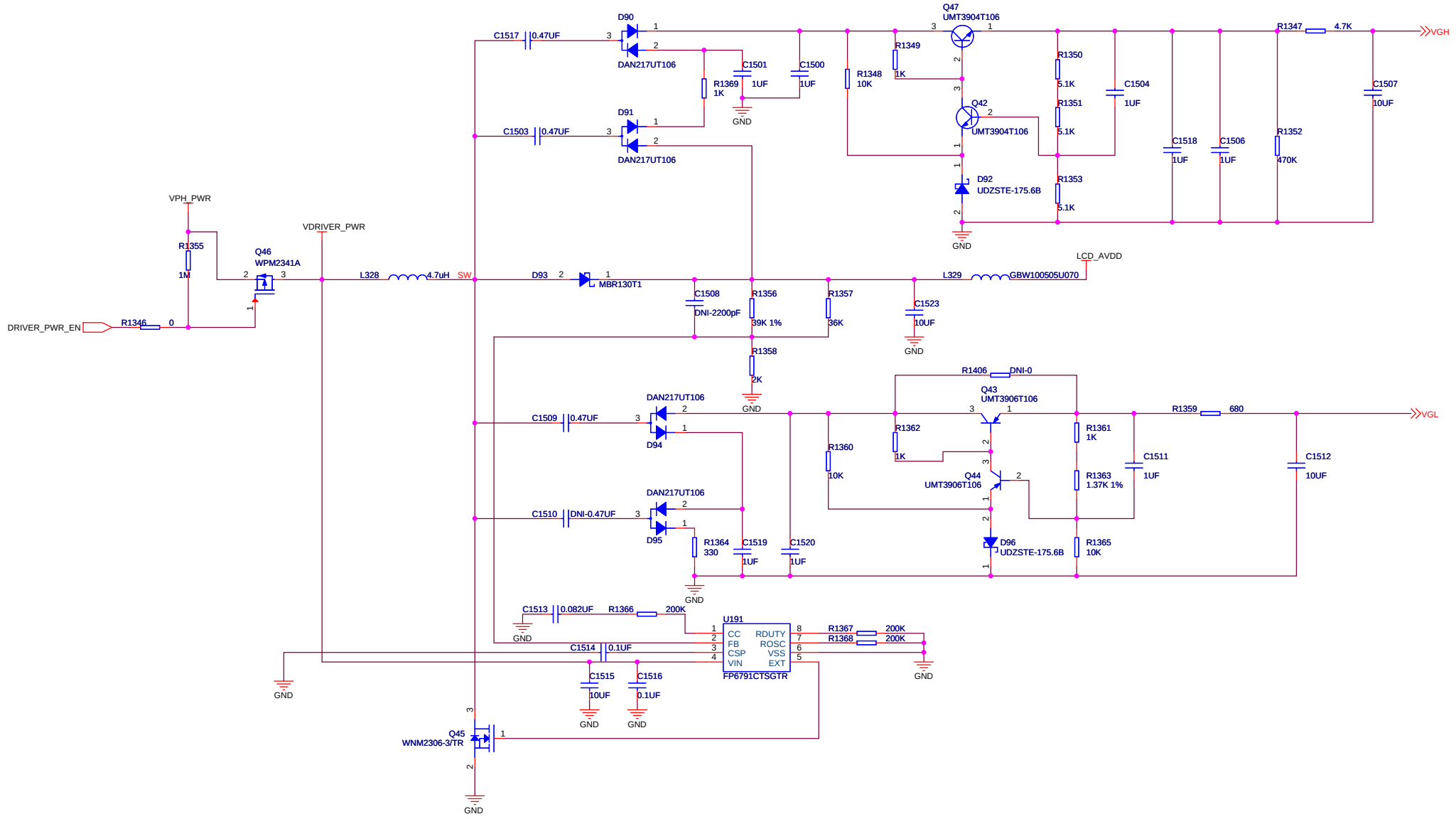

ZHNTD

Drawing Title: **Volgo8 PAD**

Page Title: **LCD DC/DC Interface**

Size	Document Number	Rev
A3	<Doc>	001

Date: Friday, March 01, 2013 | Sheet 16 of 34

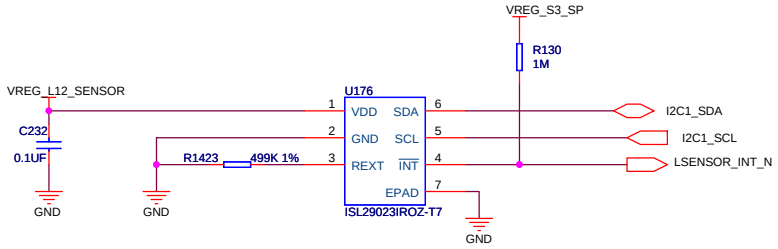

INFO: I2C SLAVE ADDRESS=0x88/0x89

ZHNTD

Drawing Title: **Volgo8 PAD**

Page Title: **Proximity Interface**

Size	Document Number	Rev
A3	<Doc>	001

Date: Friday, March 01, 2013 | Sheet 17 of 34

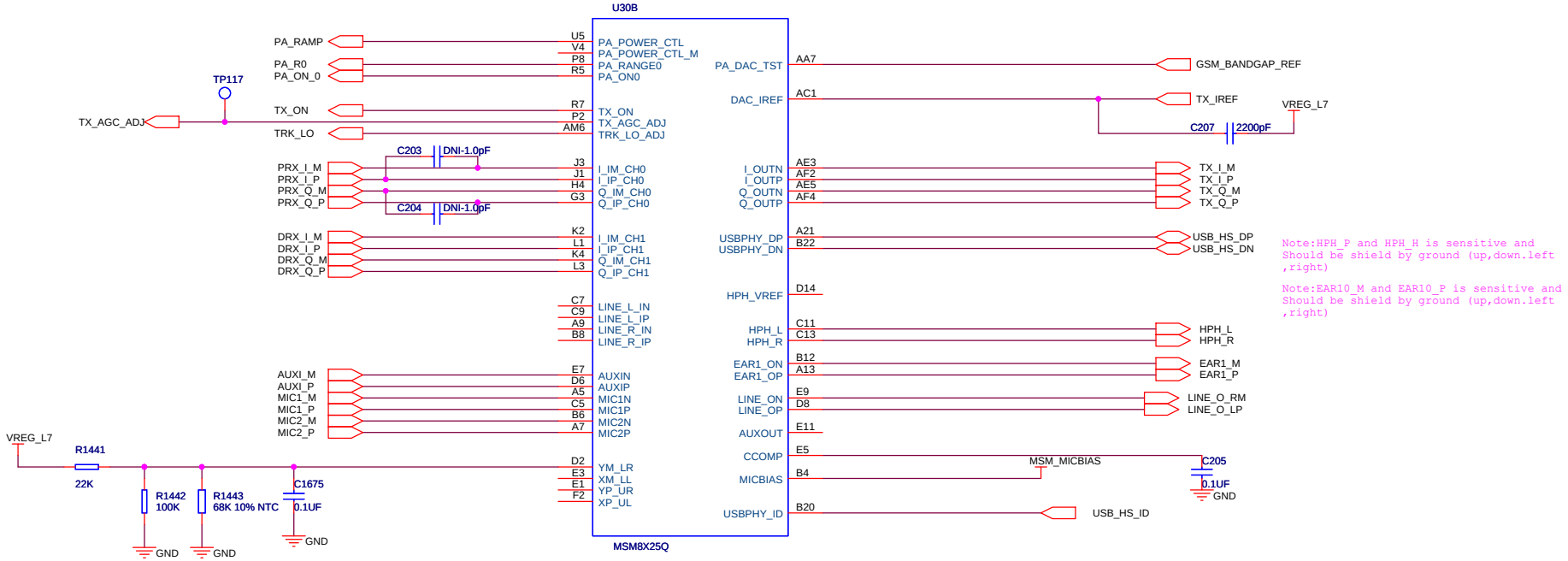

Note:HPH_P and HPH_H is sensitive and Should be shield by ground (up,down.left ,right)

Note:EAR10_M and EAR10_P is sensitive and Should be shield by ground (up,down.left ,right)

ZHNTD

Drawing Title: **Volgo8 PAD**

Page Title: **MSM7227A Analog and RF Interface**

Size	Document Number	Rev
A3	<Doc>	001

Date: Friday, March 01, 2013 | Sheet 19 of 34

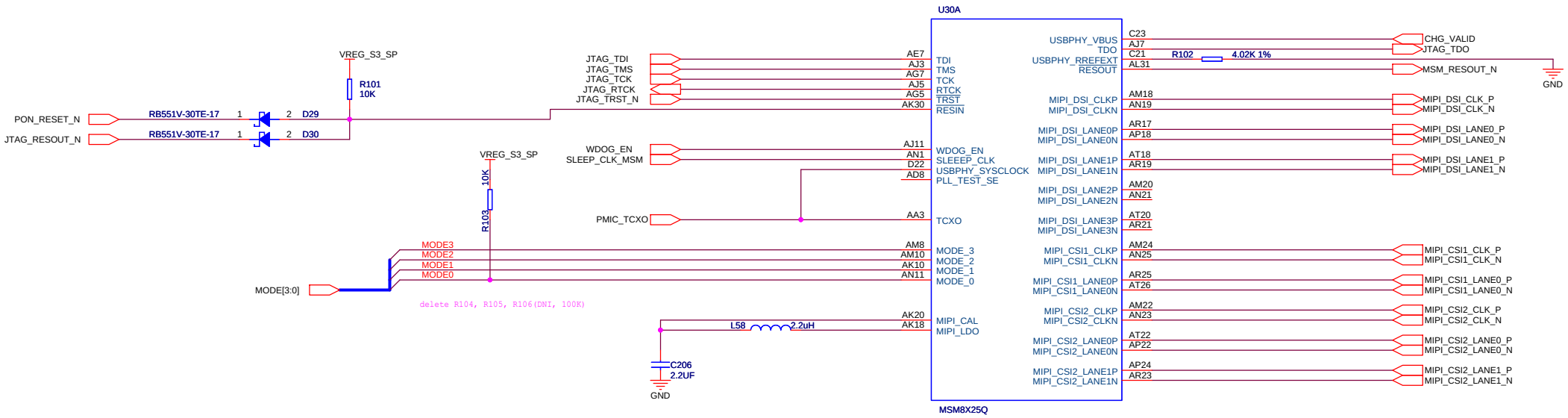

ARM9 MODE[3:0]	MSM7X27A OPERATING MODE
0000	ARM9 on P_Jtag; ARM CORTEX A5 on A_Jtag
0001	ARM9 + ARM CORTEX A5 daisy chain on P_Jtag

P_Jtag = Primary JTAG port, A_Jtag = Auxilliary JTAG port

NOTES: 1. MODE(3:0) pins have internal Pull Downs.

ZHNTD

Drawing Title: **Volgo8 PAD**

Page Title: **MSM7227A Control Interface**

Size	Document Number	Rev
A3	<Doc>	001

Date: Friday, March 01, 2013 | Sheet 20 of 34

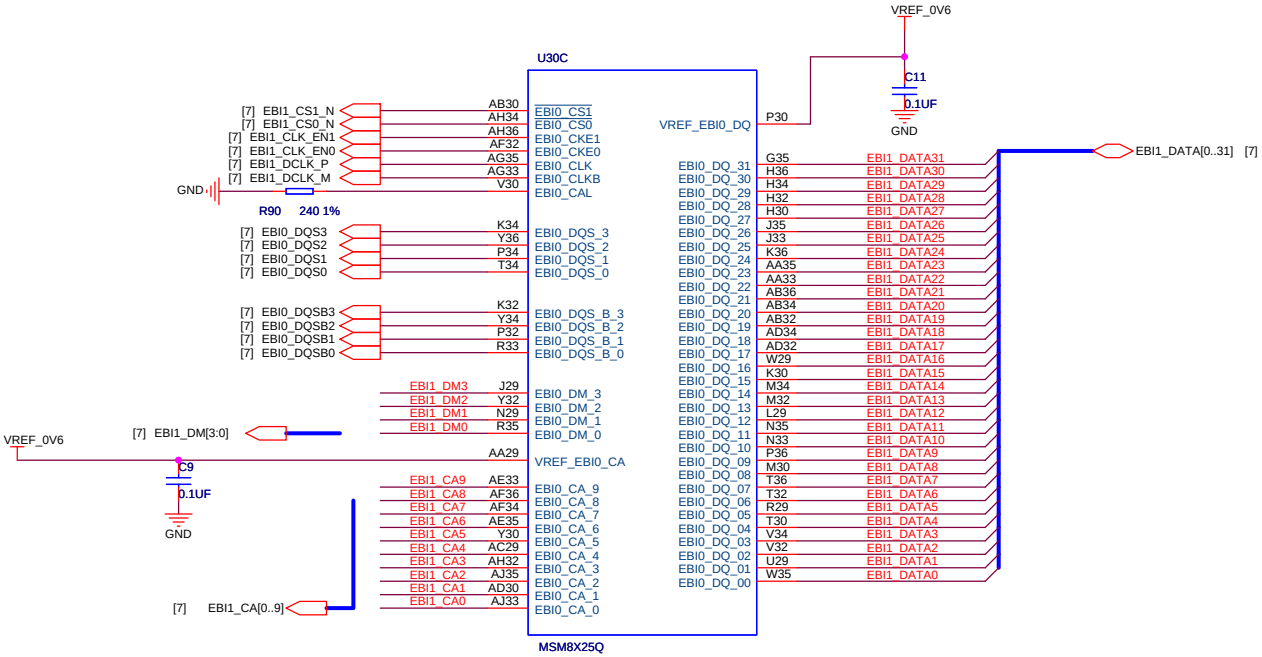

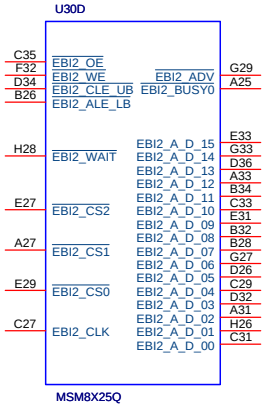

ZHNTD

Drawing Title: **Volgo8 PAD**

Page Title: **MSM7627A EBI1 and EBI2 Interface**

Size	Document Number	Rev
A3	<Doc>	001

Date: Friday, March 01, 2013 | Sheet 21 of 34

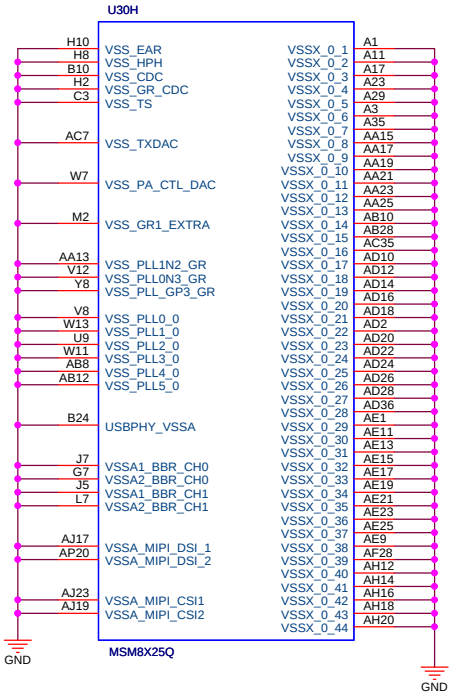

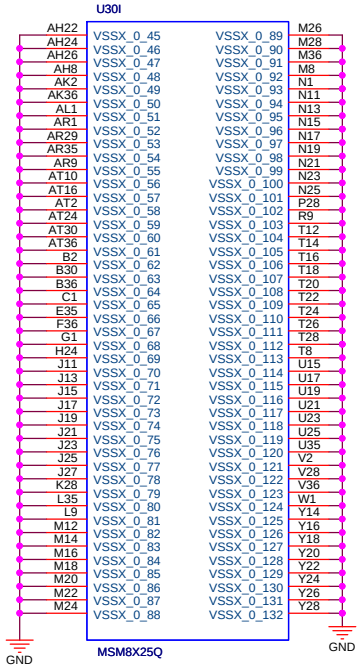

ZHNTD

Drawing Title: **Volgo8 PAD**

Page Title: **MSM7227A GND**

Size	Document Number	Rev
A3	<Doc>	001

Date: Friday, March 01, 2013 | Sheet 22 of 34

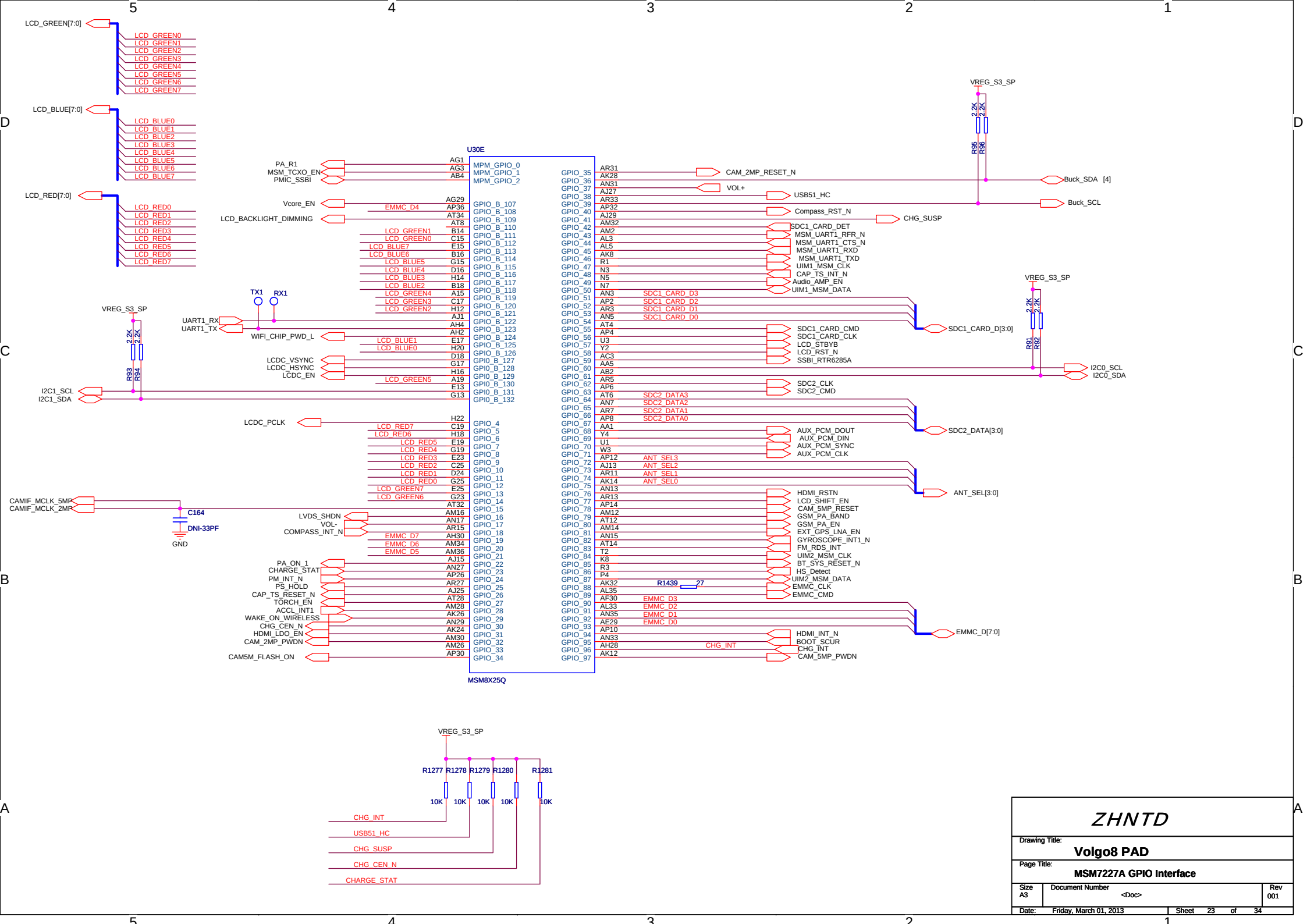
LCD_GREEN[7:0]
LCD_GREEN0
LCD_GREEN1
LCD_GREEN2
LCD_GREEN3
LCD_GREEN4
LCD_GREEN5
LCD_GREEN6
LCD_GREEN7
LCD_BLUE[7:0]
LCD_BLUE0
LCD_BLUE1
LCD_BLUE2
LCD_BLUE3
LCD_BLUE4
LCD_BLUE5
LCD_BLUE6
LCD_BLUE7
LCD_RED[7:0]
LCD_RED0
LCD_RED1
LCD_RED2
LCD_RED3
LCD_RED4
LCD_RED5
LCD_RED6
LCD_RED7
U30E
MSM8X25Q
PA_R1
MSM_TCXO_EN
PMIC_SSBI
Vcore_EN
LCD_BACKLIGHT_DIMMING
TX1
RX1
UART1_RX
UART1_TX
WIFI_CHIP_PWD_L
VREG_S3_SP
R93
R94
2.2K
I2C1_SCL
I2C1_SDA
LCDC_VSYNC
LCDC_HSYNC
LCDC_EN
LCDC_PCLK
CAMIF_MCLK_5MP
CAMIF_MCLK_2MP
C164
DNI-33PF
GND
LVDS_SHDN
VOL-
COMPASS_INT_N
PA_ON_1
CHARGE_STAT
PM_INT_N
PS_HOLD
CAP_TS_RESET_N
TORCH_EN
ACCL_INT1
WAKE_ON_WIRELESS
CHG_CEN_N
HDMI_LDO_EN
CAM_2MP_PWDN
CAM5M_FLASH_ON
CAM_2MP_RESET_N
VOL+
USB51_HC
Compass_RST_N
CHG_SUSP
SDC1_CARD_DET
MSM_UART1_RFR_N
MSM_UART1_CTS_N
MSM_UART1_RXD
MSM_UART1_TXD
UIM1_MSM_CLK
CAP_TS_INT_N
Audio_AMP_EN
UIM1_MSM_DATA
SDC1_CARD_D[3:0]
SDC1_CARD_CMD
SDC1_CARD_CLK
LCD_STBYB
LCD_RST_N
SSBI_RTR6285A
SDC2_CLK
SDC2_CMD
SDC2_DATA[3:0]
AUX_PCM_DOUT
AUX_PCM_DIN
AUX_PCM_SYNC
AUX_PCM_CLK
ANT_SEL[3:0]
HDMI_RSTN
LCD_SHIFT_EN
CAM_5MP_RESET
GSM_PA_BAND
GSM_PA_EN
EXT_GPS_LNA_EN
GYROSCOPE_INT1_N
FM_RDS_INT
UIM2_MSM_CLK
BT_SYS_RESET_N
HS_Detect
UIM2_MSM_DATA
EMMC_CLK
EMMC_CMD
R1439
27
EMMC_D[7:0]
HDMI_INT_N
BOOT_SCUR
CHG_INT
CAM_5MP_PWDN
Buck_SDA [4]
Buck_SCL
R95
R96
R91
R92
I2C0_SCL
I2C0_SDA
R1277
R1278
R1279
R1280
R1281
10K
ZHNTD
Drawing Title:
Volgo8 PAD
Page Title:
MSM7227A GPIO Interface
Size
A3
Document Number
<Doc>
Rev
001
Date:
Friday, March 01, 2013
Sheet
23
of
34

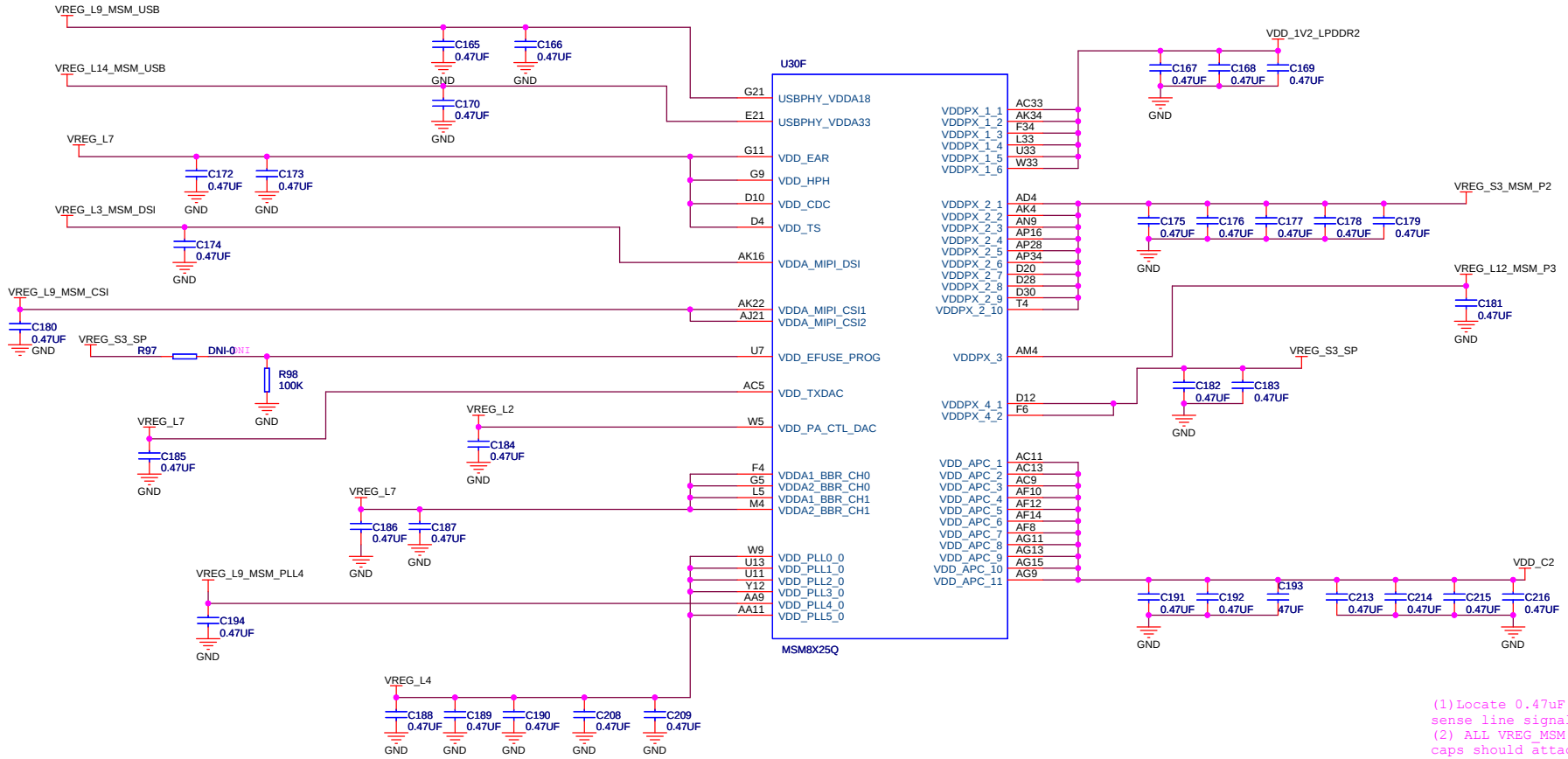

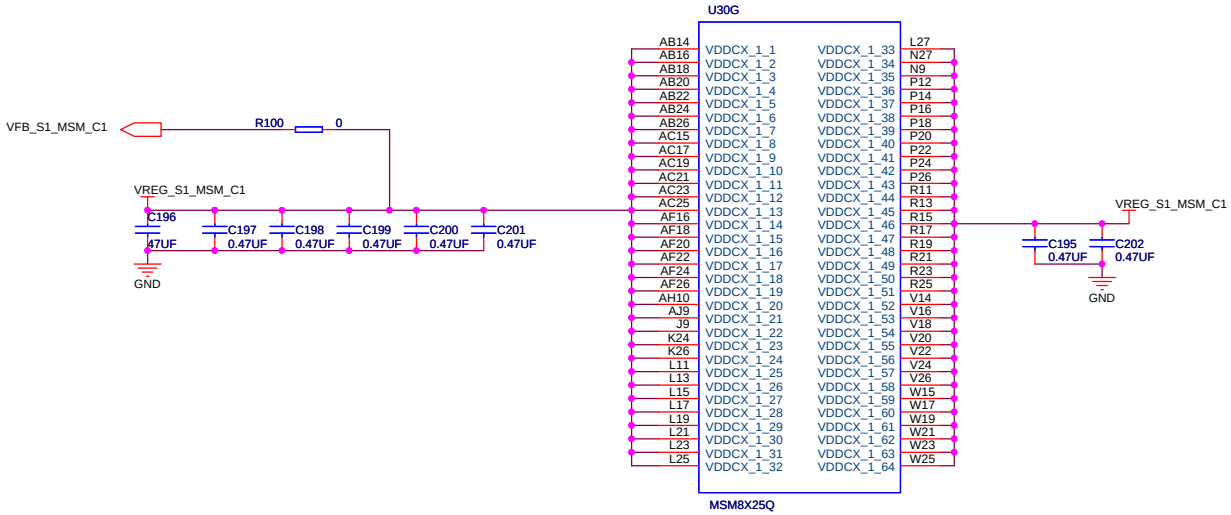

ZHNTD

Drawing Title:	Volgo8 PAD
Page Title:	MSM7227A Power
Size A3	Document Number <Doc>
Rev 001	
Date: Friday, March 01, 2013	Sheet 24 of 34

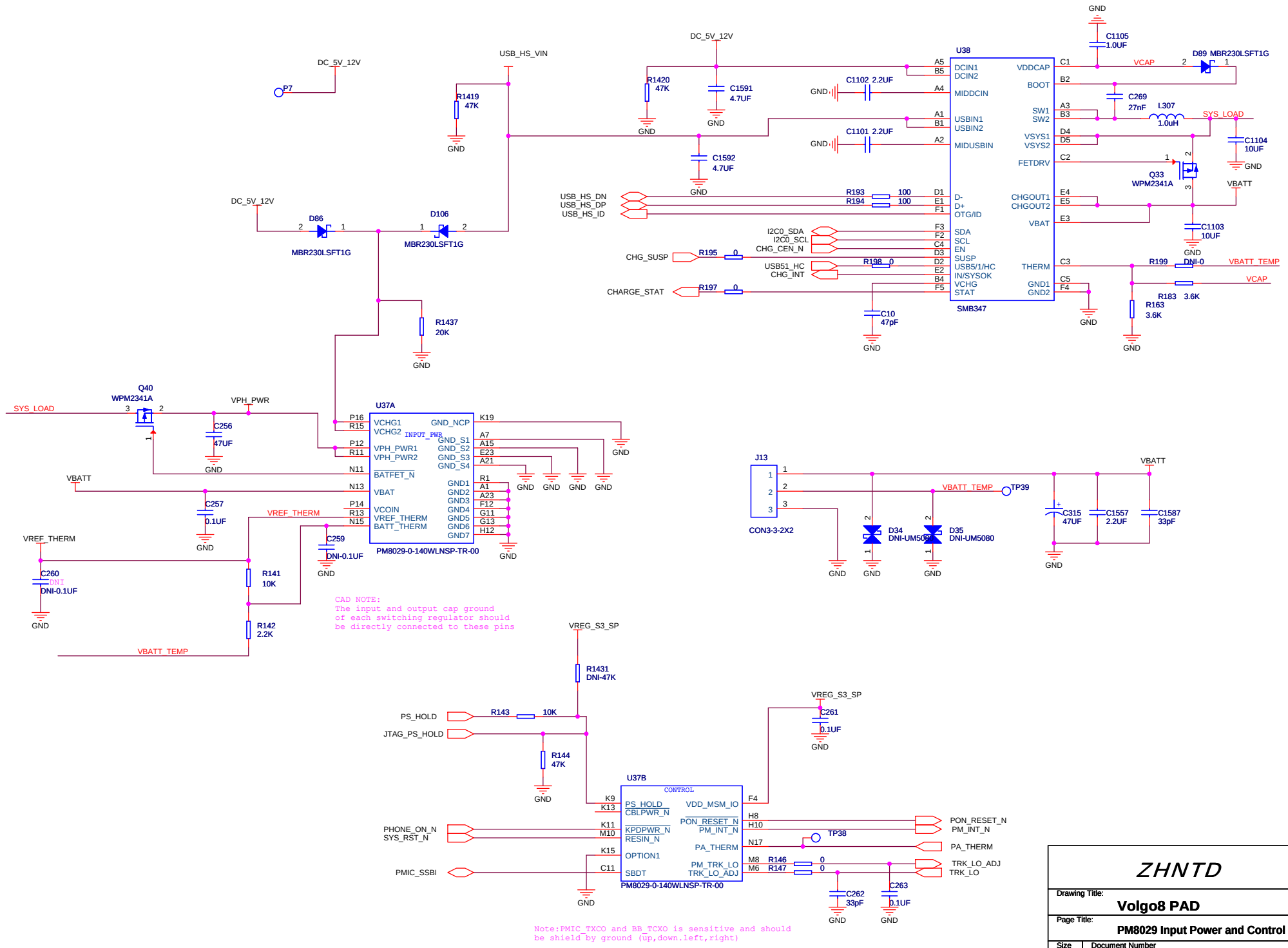

ZHNTD

Drawing Title: **Volgo8 PAD**

Page Title: **PM8029 Input Power and Control Interface**

Size	Document Number	Rev
A3	<Doc>	001

Date: Friday, March 01, 2013 | Sheet 25 of 34

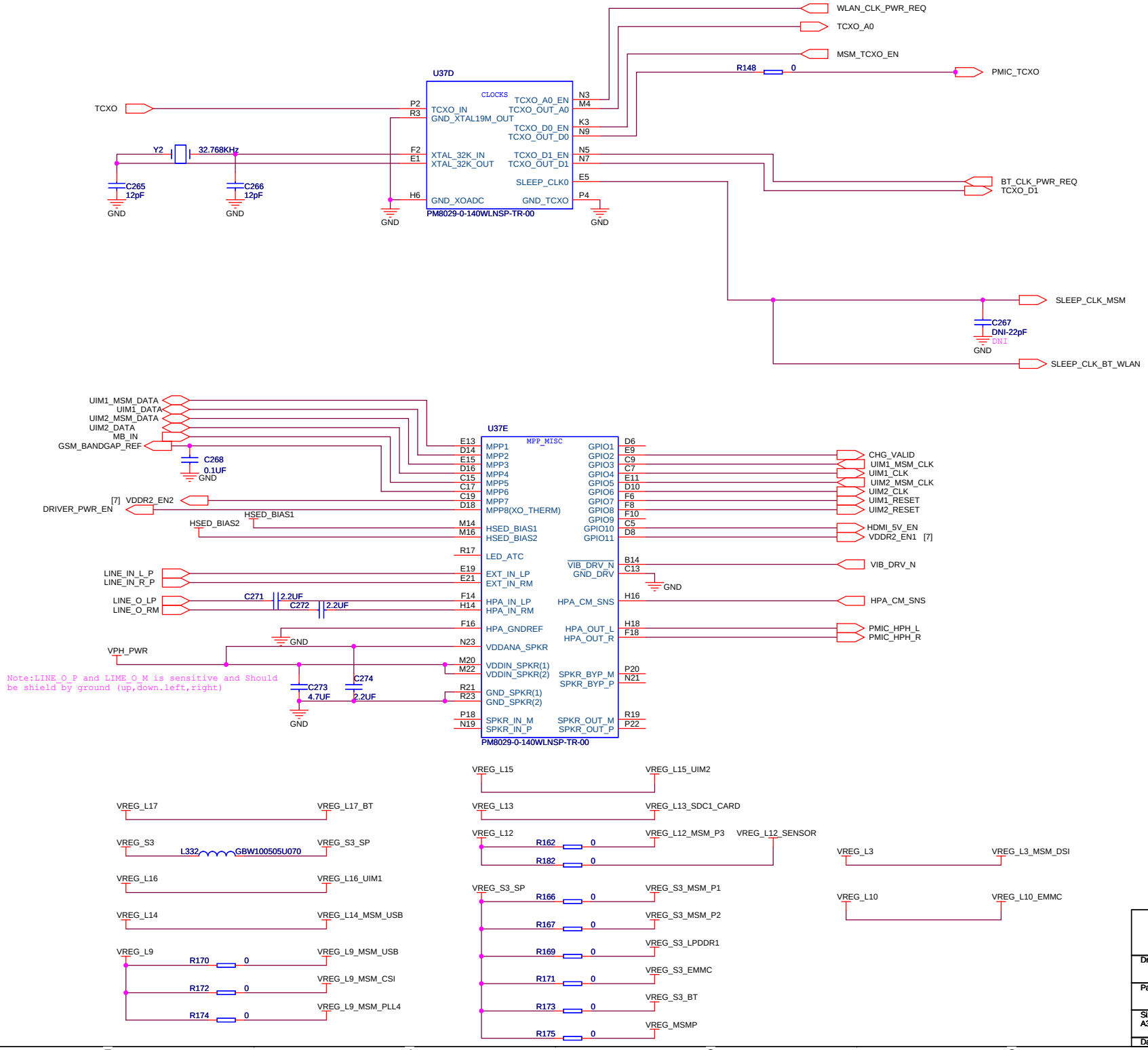

ZHNTD

Drawing Title: **Volgo8 PAD**

Page Title: **PM8029 User and Misc Interface**

Size	Document Number	Rev
A3	<Doc>	001

Date: Friday, March 01, 2013 | Sheet 26 of 34

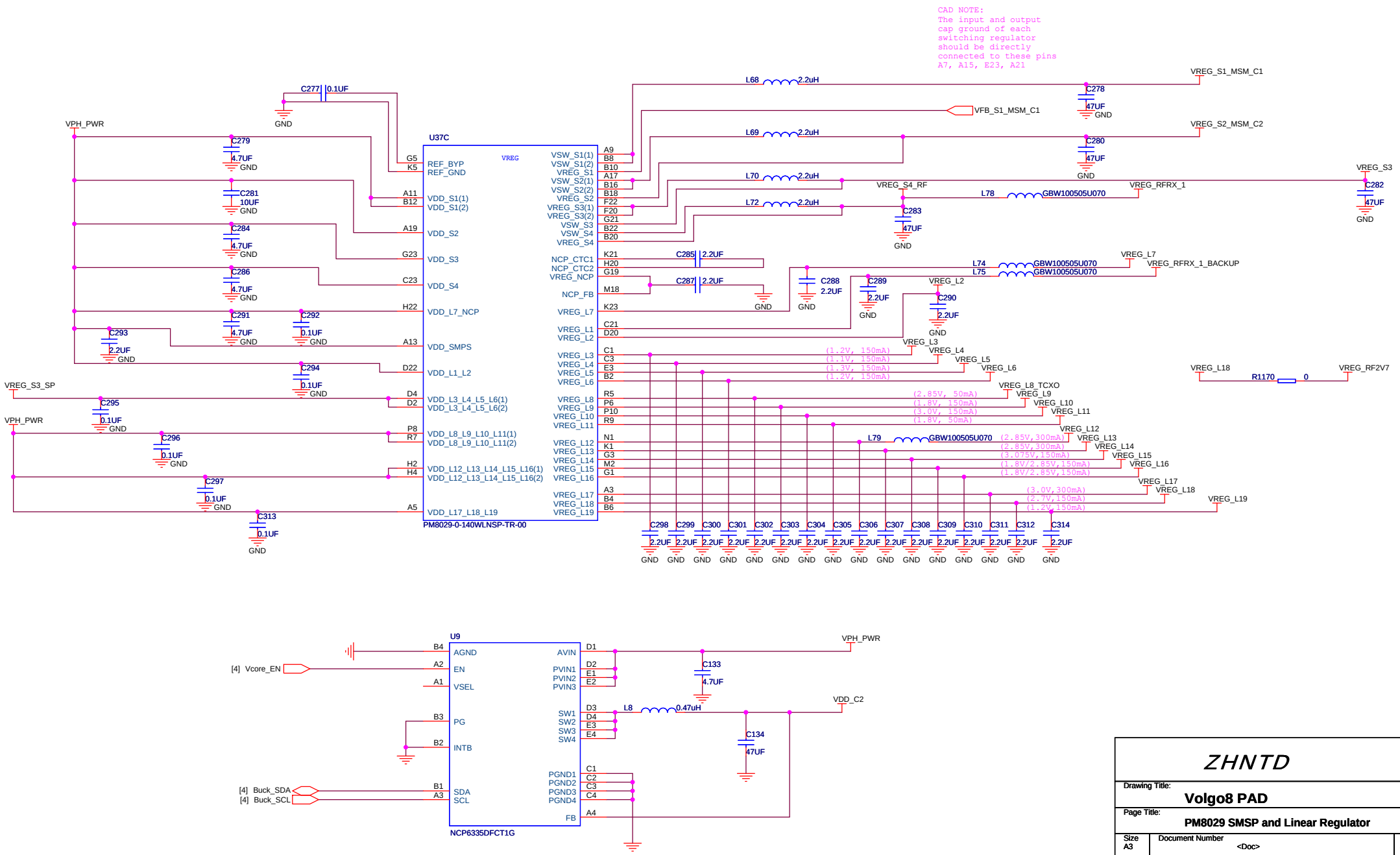

ZHNTD	
Drawing Title:	Volgo8 PAD
Page Title:	PM8029 SMSP and Linear Regulator
Size A3	Document Number <Doc>
Rev 001	
Date: Friday, March 01, 2013	Sheet 27 of 34

HS2525

MODE	VC1	VC2	VC3	VC4
GSM850/EGSM TX1	H	L	L	H
DCS1800/PCS1900 TX2	H	L	L	L
DCS1800 RX1	L	H	L	H
PCS1900 RX2	L	H	L	L
EGSM900 RX3	L	L	L	H
GSM850 RX4	L	L	L	L
	L	L	H	L
	L	L	H	H
	L	H	H	L

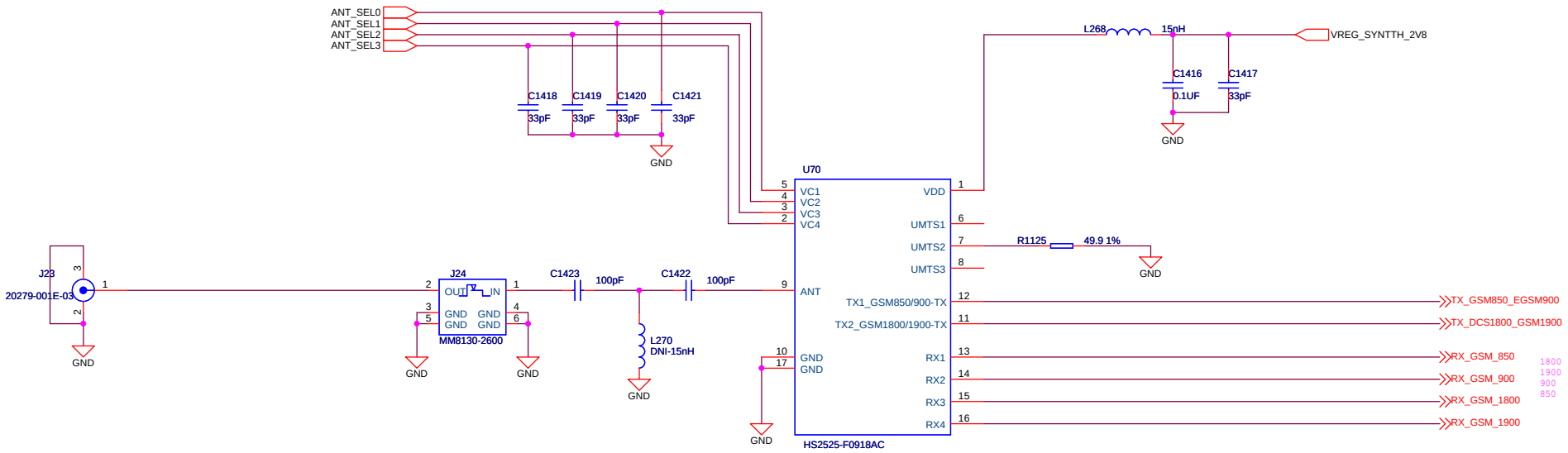

ZHNTD

Drawing Title: **Volgo97 PAD**

Page Title: **PRIMARY ANT & Antenna Switch**

Size	Document Number	Rev
A3	<Doc>	100

Date: Thursday, August 15, 2013 | Sheet 28 of 34

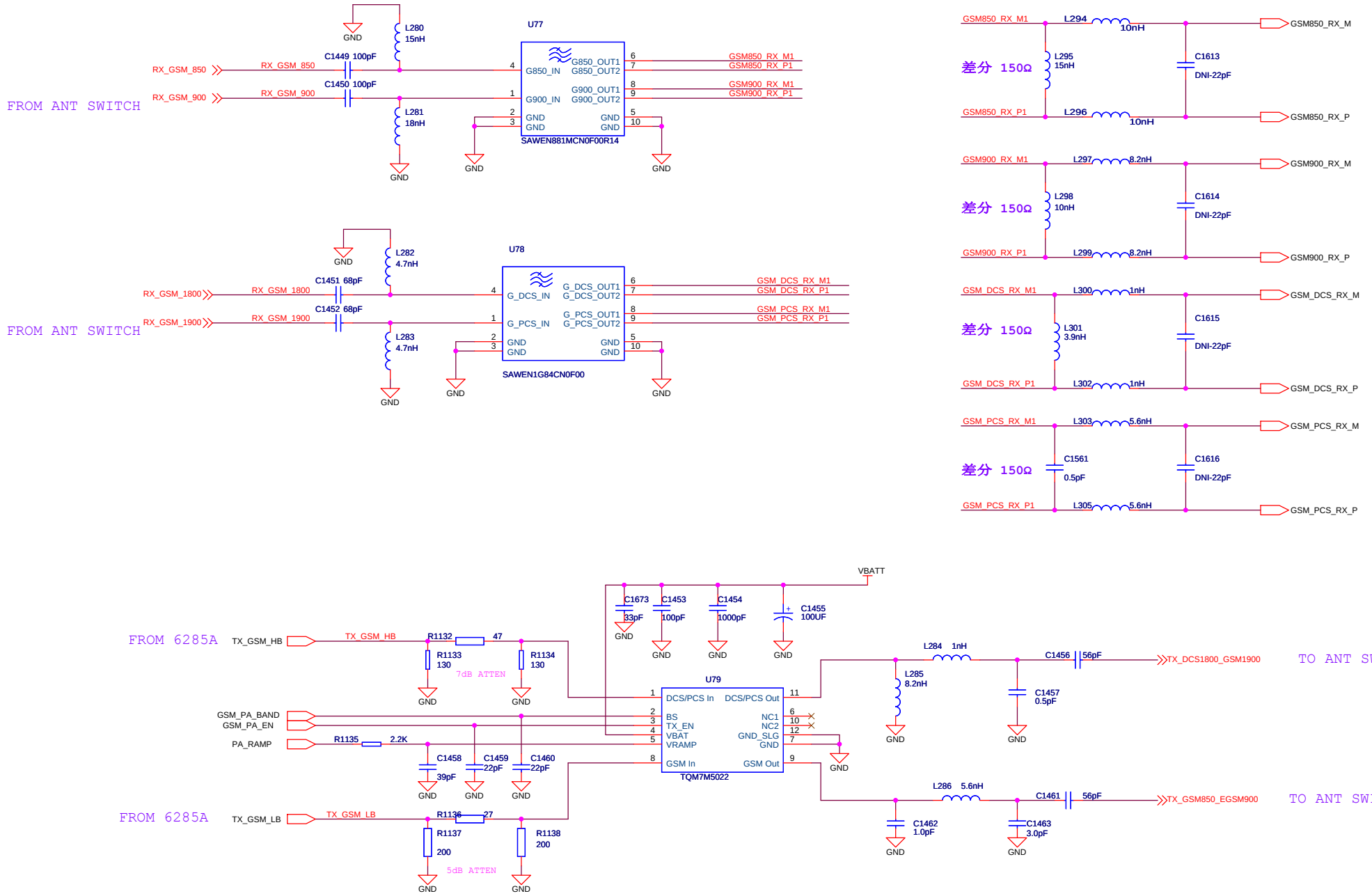

ZHNTD

Drawing Title: **Volgo8 PAD**

Page Title: **GSM QUAD BAND PA and Rx SAW Filter**

Size	Document Number	Rev
A3	<Doc>	100

Date: Friday, March 01, 2013 | Sheet 31 of 34

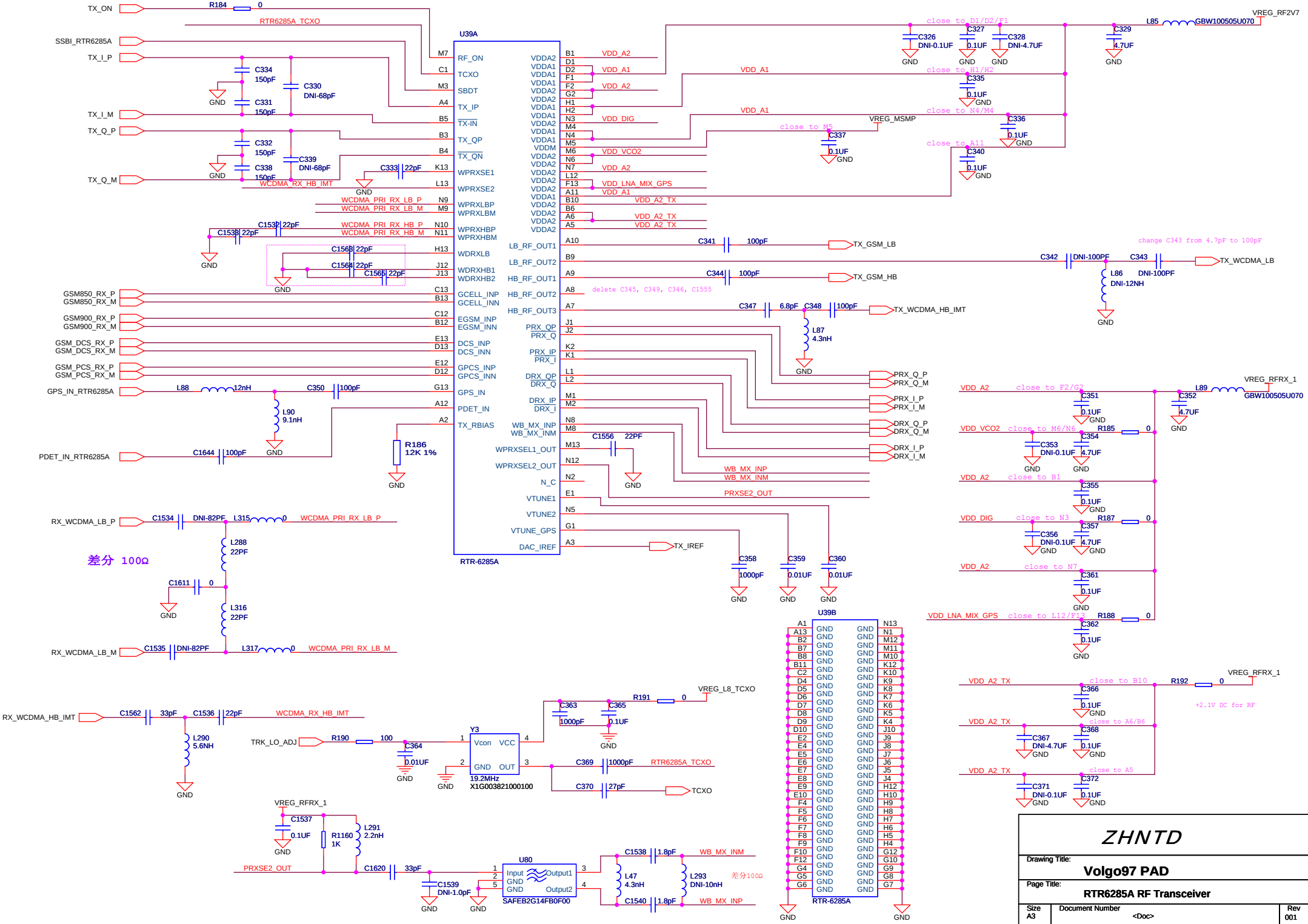
U39A
RTR-6285A
U39B
RTR-6285A
U80
SAFEB2G14FB0F00
Y3
19.2MHz
X1G003821000100
差分 100Ω
VREG_RF2V7
VREG_RFRX_1
VREG_L8_TCXO
VREG_MSMP
TX_GSM_LB
TX_GSM_HB
TX_WCDMA_LB
TX_WCDMA_HB_IMT
TX_IREF
TCXO
RTR6285A_TCXO
WCDMA_RX_HB_IMT
WCDMA_PRI_RX_LB_P
WCDMA_PRI_RX_LB_M
WCDMA_PRI_RX_HB_P
WCDMA_PRI_RX_HB_M
WB_MX_INP
WB_MX_INM
PRXSE2_OUT
delete C345, C349, C346, C1555
change C343 from 4.7pF to 100pF
+2.1V DC for RF
ZHNTD
Drawing Title:
Volgo97 PAD
Page Title:
RTR6285A RF Transceiver
Size A3
Document Number
<Doc>
Rev 001
Date: Friday, March 01, 2013
Sheet 32 of 34

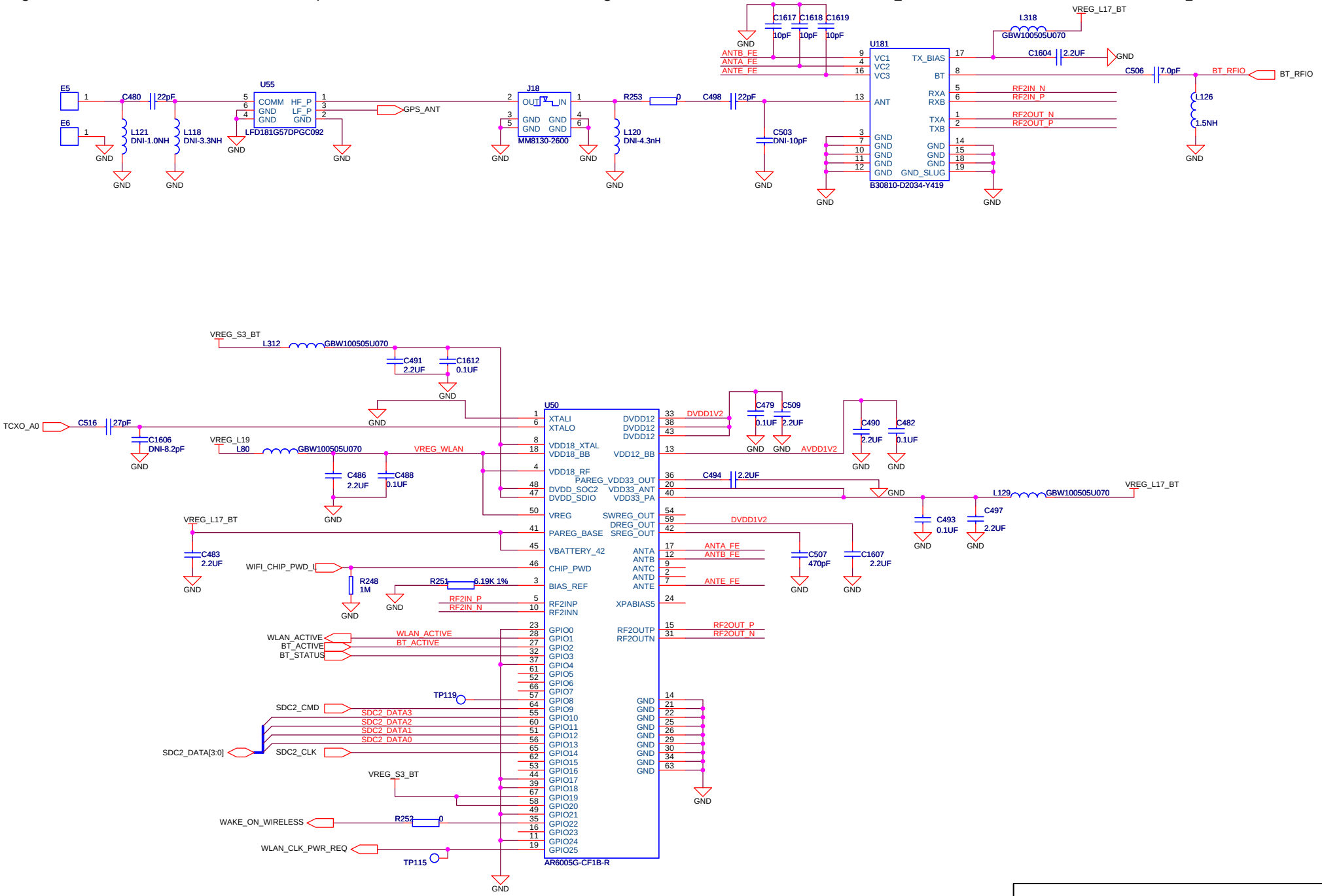

ZHNTD

Drawing Title: **Volgo8 PAD**

Page Title: **WLAN**

Size	Document Number	Rev
A3	<Doc>	001

Date: Friday, March 01, 2013 | Sheet 34 of 34