REVISION	Date	Brief Description of Changes
Rev0.0.1	Feb 9th, 2011	This is original issue of Volgo7 PAD
Rev0.0.2	Jul 11, 2012	1 Modify R1392 value from 47k to 10k in EMMC page

ZHNTD

Drawing Title: Volgo7 PAD

Page Title: Revision History

Size	Document Number	Rev
A3	<Doc>	001

Date: Monday, July 30, 2012 | Sheet 1 of 31

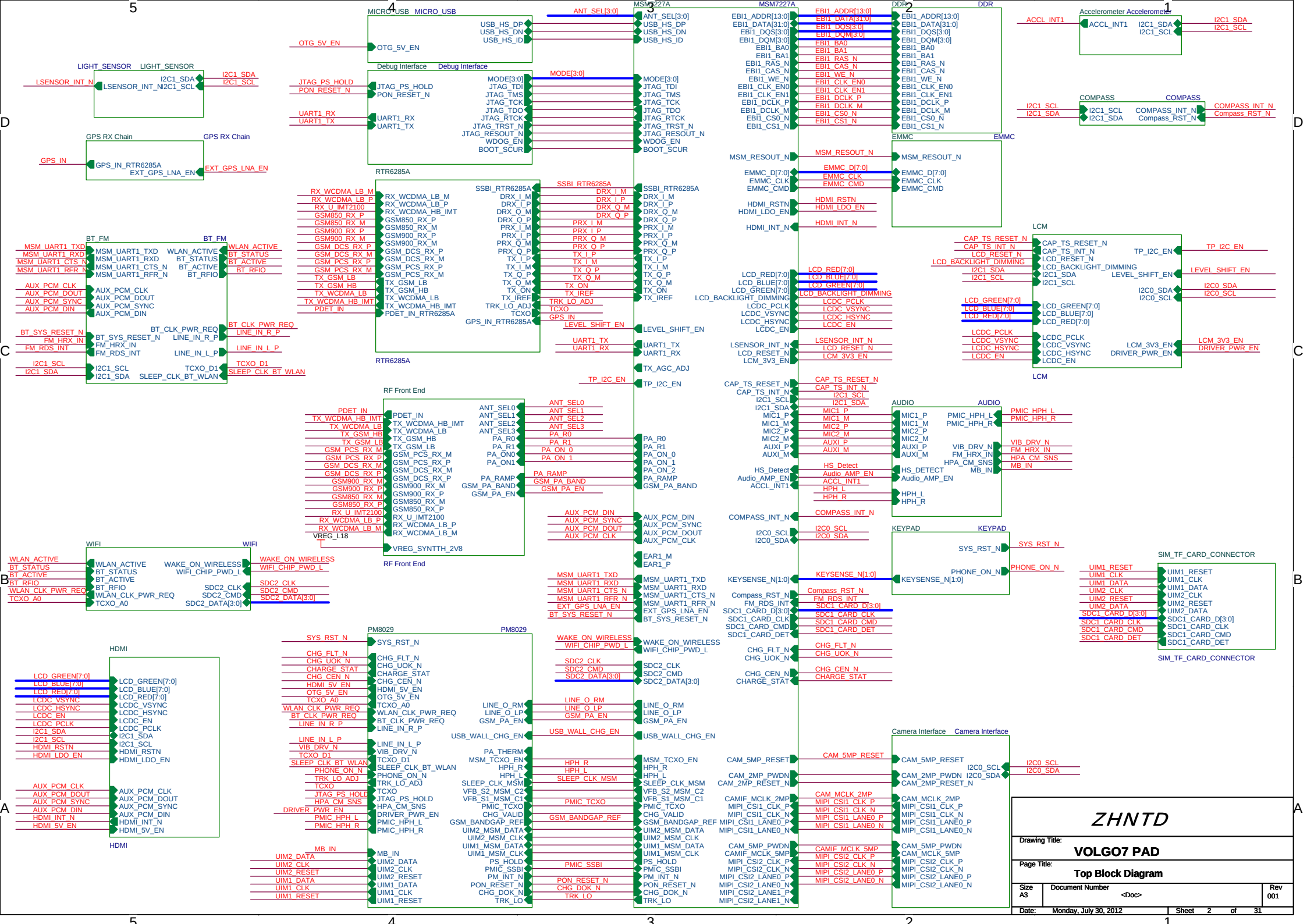
MICRO_USB MICRO_USB
USB_HS_DP
USB_HS_DN
USB_HS_ID
OTG_5V_EN
LIGHT_SENSOR LIGHT_SENSOR
LSENSOR_INT_N
I2C1_SDA
I2C1_SCL
Debug Interface Debug Interface
JTAG_PS_HOLD
PON_RESET_N
UART1_RX
UART1_TX
MODE[3:0]
JTAG_TDI
JTAG_TMS
JTAG_TCK
JTAG_TDO
JTAG_RTCK
JTAG_TRST_N
JTAG_RESOUT_N
WDOG_EN
BOOT_SCUR
GPS RX Chain GPS RX Chain
GPS_IN
GPS_IN_RTR6285A
EXT_GPS_LNA_EN
RTR6285A
RX_WCDMA_LB_M
RX_WCDMA_LB_P
RX_U_IMT2100
GSM850_RX_P
GSM850_RX_M
GSM900_RX_P
GSM900_RX_M
GSM_DCS_RX_P
GSM_DCS_RX_M
GSM_PCS_RX_P
GSM_PCS_RX_M
TX_GSM_LB
TX_GSM_HB
TX_WCDMA_LB
TX_WCDMA_HB_IMT
PDET_IN
SSBI_RTR6285A
DRX_I_M
DRX_I_P
DRX_Q_M
DRX_Q_P
PRX_I_M
PRX_I_P
PRX_Q_M
PRX_Q_P
TX_I_P
TX_I_M
TX_Q_P
TX_Q_M
TX_ON
TX_IREF
TRK_LO_ADJ
TCXO
GPS_IN
LEVEL_SHIFT_EN
UART1_TX
UART1_RX
TX_AGC_ADJ
TP_I2C_EN
BT_FM BT_FM
MSM_UART1_TXD
MSM_UART1_RXD
MSM_UART1_CTS_N
MSM_UART1_RFR_N
WLAN_ACTIVE
BT_STATUS
BT_ACTIVE
BT_RFIO
AUX_PCM_CLK
AUX_PCM_DOUT
AUX_PCM_SYNC
AUX_PCM_DIN
BT_CLK_PWR_REQ
BT_SYS_RESET_N
FM_HRX_IN
FM_RDS_INT
LINE_IN_R_P
LINE_IN_L_P
I2C1_SCL
I2C1_SDA
TCXO_D1
SLEEP_CLK_BT_WLAN
RF Front End
PDET_IN
TX_WCDMA_HB_IMT
TX_WCDMA_LB
TX_GSM_HB
TX_GSM_LB
GSM_PCS_RX_M
GSM_PCS_RX_P
GSM_DCS_RX_M
GSM_DCS_RX_P
GSM900_RX_M
GSM900_RX_P
GSM850_RX_M
GSM850_RX_P
RX_U_IMT2100
RX_WCDMA_LB_P
RX_WCDMA_LB_M
VREG_L18
VREG_SYNTTH_2V8
ANT_SEL0
ANT_SEL1
ANT_SEL2
ANT_SEL3
PA_R0
PA_R1
PA_ON_0
PA_ON_1
PA_ON0
PA_ON1
PA_RAMP
GSM_PA_BAND
GSM_PA_EN
WIFI WIFI
WLAN_ACTIVE
BT_STATUS
BT_ACTIVE
BT_RFIO
WLAN_CLK_PWR_REQ
TCXO_A0
WAKE_ON_WIRELESS
WIFI_CHIP_PWD_L
SDC2_CLK
SDC2_CMD
SDC2_DATA[3:0]
PM8029 PM8029
SYS_RST_N
CHG_FLT_N
CHG_UOK_N
CHARGE_STAT
CHG_CEN_N
HDMI_5V_EN
OTG_5V_EN
TCXO_A0
WLAN_CLK_PWR_REQ
BT_CLK_PWR_REQ
LINE_IN_R_P
LINE_IN_L_P
VIB_DRV_N
TCXO_D1
SLEEP_CLK_BT_WLAN
PHONE_ON_N
TRK_LO_ADJ
TCXO
JTAG_PS_HOLD
HPA_CM_SNS
DRIVER_PWR_EN
PMIC_HPH_L
PMIC_HPH_R
MB_IN
UIM2_DATA
UIM2_CLK
UIM2_RESET
UIM1_DATA
UIM1_CLK
UIM1_RESET
LINE_O_RM
LINE_O_LP
GSM_PA_EN
USB_WALL_CHG_EN
PA_THERM
MSM_TCXO_EN
HPH_R
HPH_L
SLEEP_CLK_MSM
VFB_S2_MSM_C2
VFB_S1_MSM_C1
PMIC_TCXO
CHG_VALID
GSM_BANDGAP_REF
UIM2_MSM_DATA
UIM2_MSM_CLK
UIM1_MSM_DATA
UIM1_MSM_CLK
PS_HOLD
PMIC_SSBI
PM_INT_N
PON_RESET_N
CHG_DOK_N
TRK_LO
HDMI HDMI
LCD_GREEN[7:0]
LCD_BLUE[7:0]
LCD_RED[7:0]
LCDC_VSYNC
LCDC_HSYNC
LCDC_EN
LCDC_PCLK
I2C1_SDA
I2C1_SCL
HDMI_RSTN
HDMI_LDO_EN
AUX_PCM_CLK
AUX_PCM_DOUT
AUX_PCM_SYNC
AUX_PCM_DIN
HDMI_INT_N
HDMI_5V_EN
MSM7227A MSM7227A
ANT_SEL[3:0]
USB_HS_DP
USB_HS_DN
USB_HS_ID
MODE[3:0]
JTAG_TDI
JTAG_TMS
JTAG_TCK
JTAG_TDO
JTAG_RTCK
JTAG_TRST_N
JTAG_RESOUT_N
WDOG_EN
BOOT_SCUR
SSBI_RTR6285A
DRX_I_M
DRX_I_P
DRX_Q_M
DRX_Q_P
PRX_I_M
PRX_I_P
PRX_Q_M
PRX_Q_P
TX_I_P
TX_I_M
TX_Q_P
TX_Q_M
TX_ON
TX_IREF
TRK_LO_ADJ
TCXO
GPS_IN
LEVEL_SHIFT_EN
UART1_TX
UART1_RX
TX_AGC_ADJ
TP_I2C_EN
PA_R0
PA_R1
PA_ON_0
PA_ON_1
PA_ON_2
PA_RAMP
GSM_PA_BAND
AUX_PCM_DIN
AUX_PCM_SYNC
AUX_PCM_DOUT
AUX_PCM_CLK
EAR1_M
EAR1_P
MSM_UART1_TXD
MSM_UART1_RXD
MSM_UART1_CTS_N
MSM_UART1_RFR_N
EXT_GPS_LNA_EN
BT_SYS_RESET_N
WAKE_ON_WIRELESS
WIFI_CHIP_PWD_L
SDC2_CLK
SDC2_CMD
SDC2_DATA[3:0]
LINE_O_RM
LINE_O_LP
GSM_PA_EN
USB_WALL_CHG_EN
MSM_TCXO_EN
HPH_R
HPH_L
SLEEP_CLK_MSM
VFB_S2_MSM_C2
VFB_S1_MSM_C1
PMIC_TCXO
GSM_BANDGAP_REF
UIM2_MSM_DATA
UIM2_MSM_CLK
UIM1_MSM_DATA
UIM1_MSM_CLK
PMIC_SSBI
PON_RESET_N
CHG_DOK_N
TRK_LO
EBI1_ADDR[13:0]
EBI1_DATA[31:0]
EBI1_DQS[3:0]
EBI1_DQM[3:0]
EBI1_BA0
EBI1_BA1
EBI1_RAS_N
EBI1_CAS_N
EBI1_WE_N
EBI1_CLK_EN0
EBI1_CLK_EN1
EBI1_DCLK_P
EBI1_DCLK_M
EBI1_CS0_N
EBI1_CS1_N
MSM_RESOUT_N
EMMC_D[7:0]
EMMC_CLK
EMMC_CMD
HDMI_RSTN
HDMI_LDO_EN
HDMI_INT_N
LCD_RED[7:0]
LCD_BLUE[7:0]
LCD_GREEN[7:0]
LCD_BACKLIGHT_DIMMING
LCDC_PCLK
LCDC_VSYNC
LCDC_HSYNC
LCDC_EN
LSENSOR_INT_N
LCD_RESET_N
LCM_3V3_EN
CAP_TS_RESET_N
CAP_TS_INT_N
I2C1_SCL
I2C1_SDA
MIC1_P
MIC1_M
MIC2_P
MIC2_M
AUXI_P
AUXI_M
HS_Detect
Audio_AMP_EN
ACCL_INT1
HPH_L
HPH_R
COMPASS_INT_N
I2C0_SCL
I2C0_SDA
KEYSENSE_N[1:0]
Compass_RST_N
FM_RDS_INT
SDC1_CARD_D[3:0]
SDC1_CARD_CLK
SDC1_CARD_CMD
SDC1_CARD_DET
CHG_FLT_N
CHG_UOK_N
CHG_CEN_N
CHARGE_STAT
CAM_5MP_RESET
CAM_2MP_PWDN
CAM_2MP_RESET_N
CAM_MCLK_2MP
MIPI_CSI1_CLK_P
MIPI_CSI1_CLK_N
MIPI_CSI1_LANE0_P
MIPI_CSI1_LANE0_N
CAM_5MP_PWDN
CAM_MCLK_5MP
MIPI_CSI2_CLK_P
MIPI_CSI2_CLK_N
MIPI_CSI2_LANE0_P
MIPI_CSI2_LANE0_N
MIPI_CSI2_LANE1_P
MIPI_CSI2_LANE1_N
DDR DDR
EMMC EMMC
Accelerometer Accelerometer
ACCL_INT1
COMPASS COMPASS
COMPASS_INT_N
Compass_RST_N
LCM LCM
CAP_TS_RESET_N
CAP_TS_INT_N
LCD_RESET_N
LCD_BACKLIGHT_DIMMING
TP_I2C_EN
LEVEL_SHIFT_EN
I2C0_SDA
I2C0_SCL
LCM_3V3_EN
DRIVER_PWR_EN
AUDIO AUDIO
PMIC_HPH_L
PMIC_HPH_R
VIB_DRV_N
FM_HRX_IN
HPA_CM_SNS
MB_IN
KEYPAD KEYPAD
SYS_RST_N
PHONE_ON_N
SIM_TF_CARD_CONNECTOR
UIM1_RESET
UIM1_CLK
UIM1_DATA
UIM2_CLK
UIM2_RESET
UIM2_DATA
SDC1_CARD_D[3:0]
SDC1_CARD_CLK
SDC1_CARD_CMD
SDC1_CARD_DET
Camera Interface Camera Interface
CAM_5MP_RESET
CAM_2MP_PWDN
CAM_2MP_RESET_N
CAM_MCLK_2MP
MIPI_CSI1_CLK_P
MIPI_CSI1_CLK_N
MIPI_CSI1_LANE0_P
MIPI_CSI1_LANE0_N
CAM_5MP_PWDN
CAM_MCLK_5MP
MIPI_CSI2_CLK_P
MIPI_CSI2_CLK_N
MIPI_CSI2_LANE0_P
MIPI_CSI2_LANE0_N
ZHNTD
Drawing Title:
VOLGO7 PAD
Page Title:
Top Block Diagram
Size A3
Document Number <Doc>
Rev 001
Date: Monday, July 30, 2012
Sheet 2 of 31

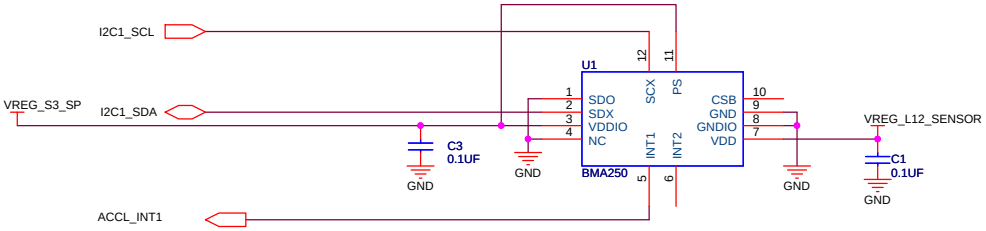

INFO: I2C SLAVE ADDRESS=0X30/0X31

ZHNTD

Drawing Title: **Volgo7 PAD**

Page Title: **Acceleration Sensor**

Size	Document Number	Rev
A3	<Doc>	001

Date: Monday, July 30, 2012 | Sheet 3 of 34

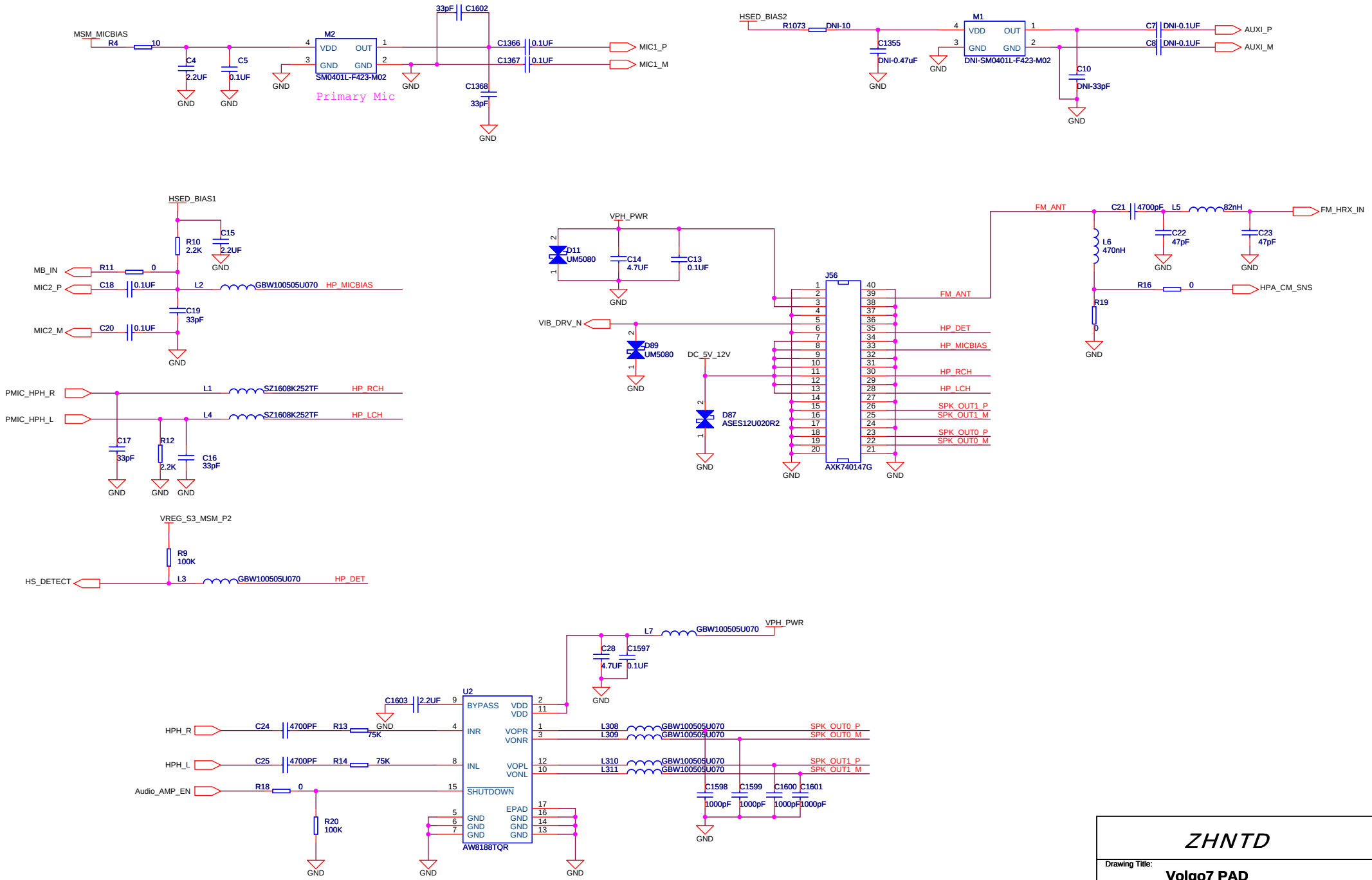

ZHNTD

Drawing Title: **Volgo7 PAD**

Page Title: **Audio Interface**

Size	Document Number	Rev
A3	<Doc>	001

Date: Monday, July 30, 2012 | Sheet 4 of 31

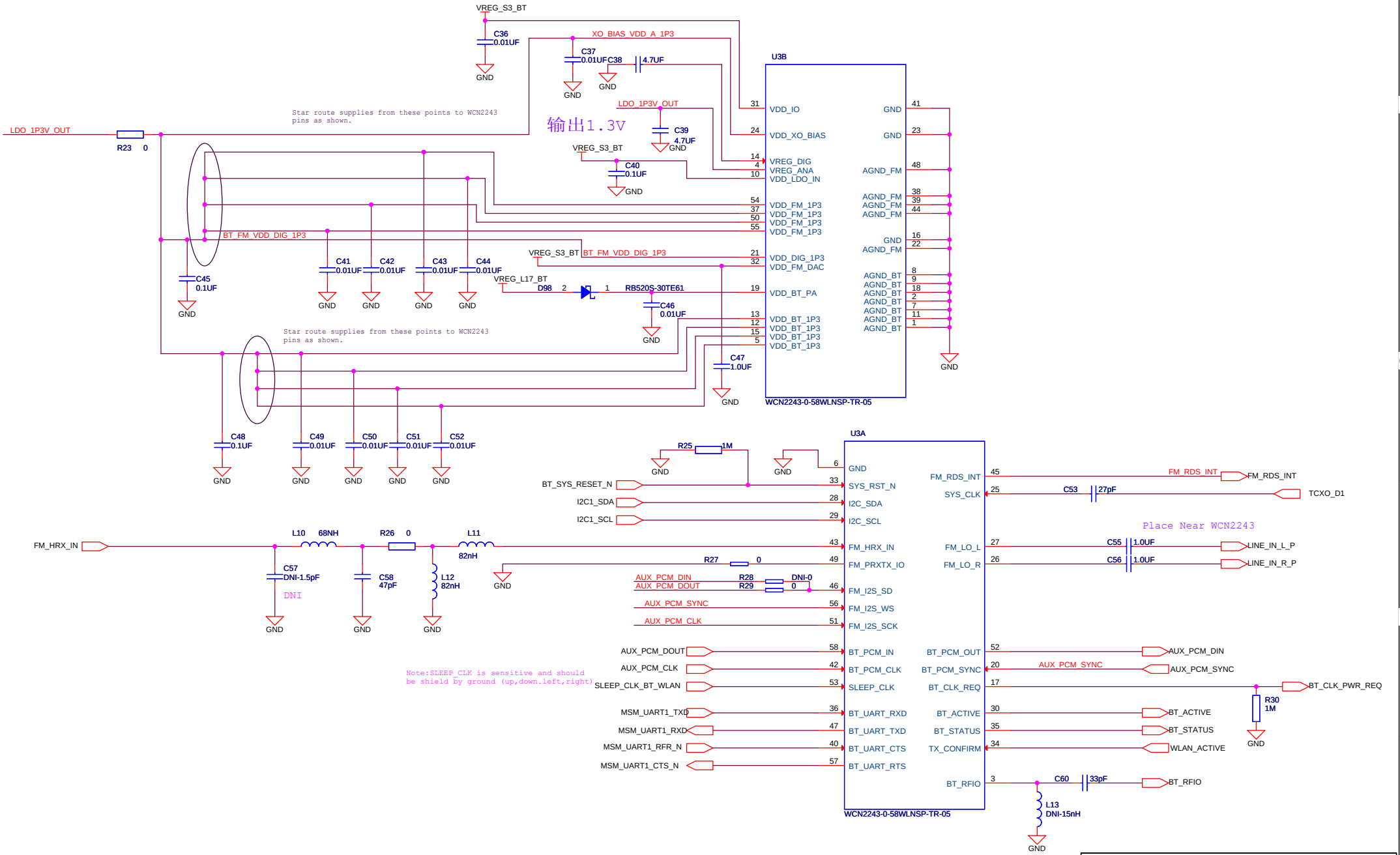

ZHNTD

Drawing Title: Volgo7 PAD

Page Title: BT and FM

Size	Document Number	Rev
A3	<Doc>	001

Date: Monday, July 30, 2012 | Sheet 5 of 31

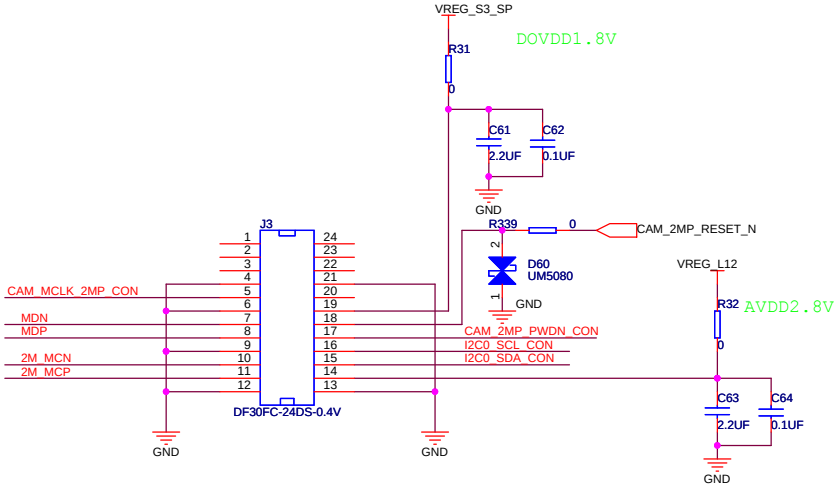

INFO: I2C SLAVE ADDRESS=0X60/0X61

Front Camera Connector (30W)
BY418-WP8800-VGA

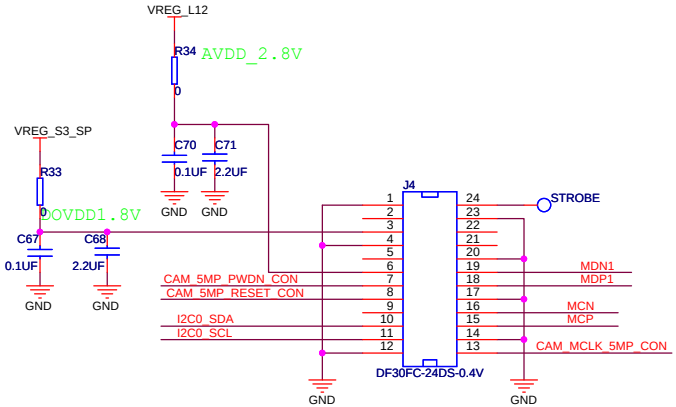

back Camera Connector (2.0MPixels)
BY474-E366B-2M-1

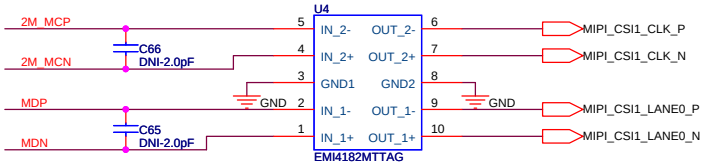

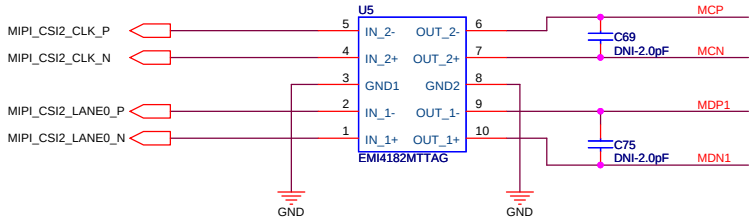

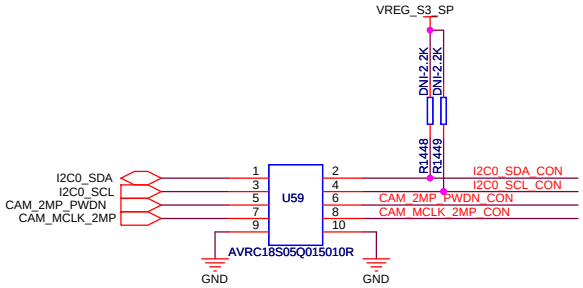

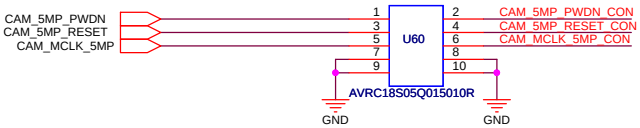

ZHNTD

Drawing Title: **Volgo7 PAD**

Page Title: **Camera Interface**

Size	Document Number	Rev
A3	<Doc>	001

Date: Monday, July 30, 2012 Sheet 6 of 31

NOTES: eCOMPASS SHOULD BE PLACED
FAR FROM METAL AND MAGENATIC PARTS

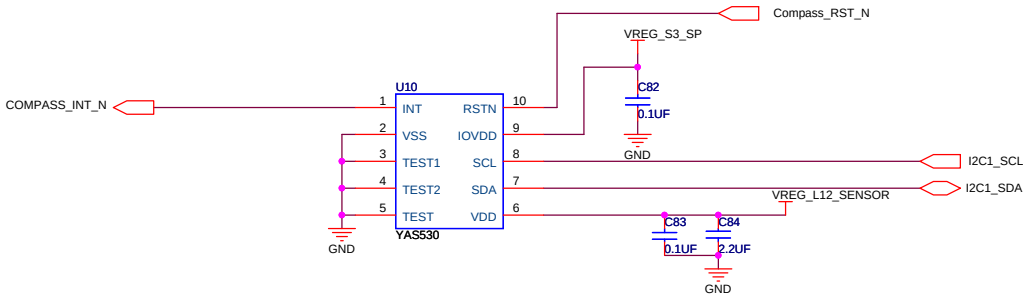

INFO: I2C SLAVE ADDRESS=0X18/0X19

ZHNTD

Drawing Title: **Volgo7 PAD**

Page Title: **Magnetic Fileld Senssor**

Size	Document Number	Rev
A3	<Doc>	001

Date: Monday, July 30, 2012 | Sheet 7 of 31

Note:EBI1_DCLK_P and EBI1_DCLK_M is sensitive and should be shield by ground (up,down,left,right)

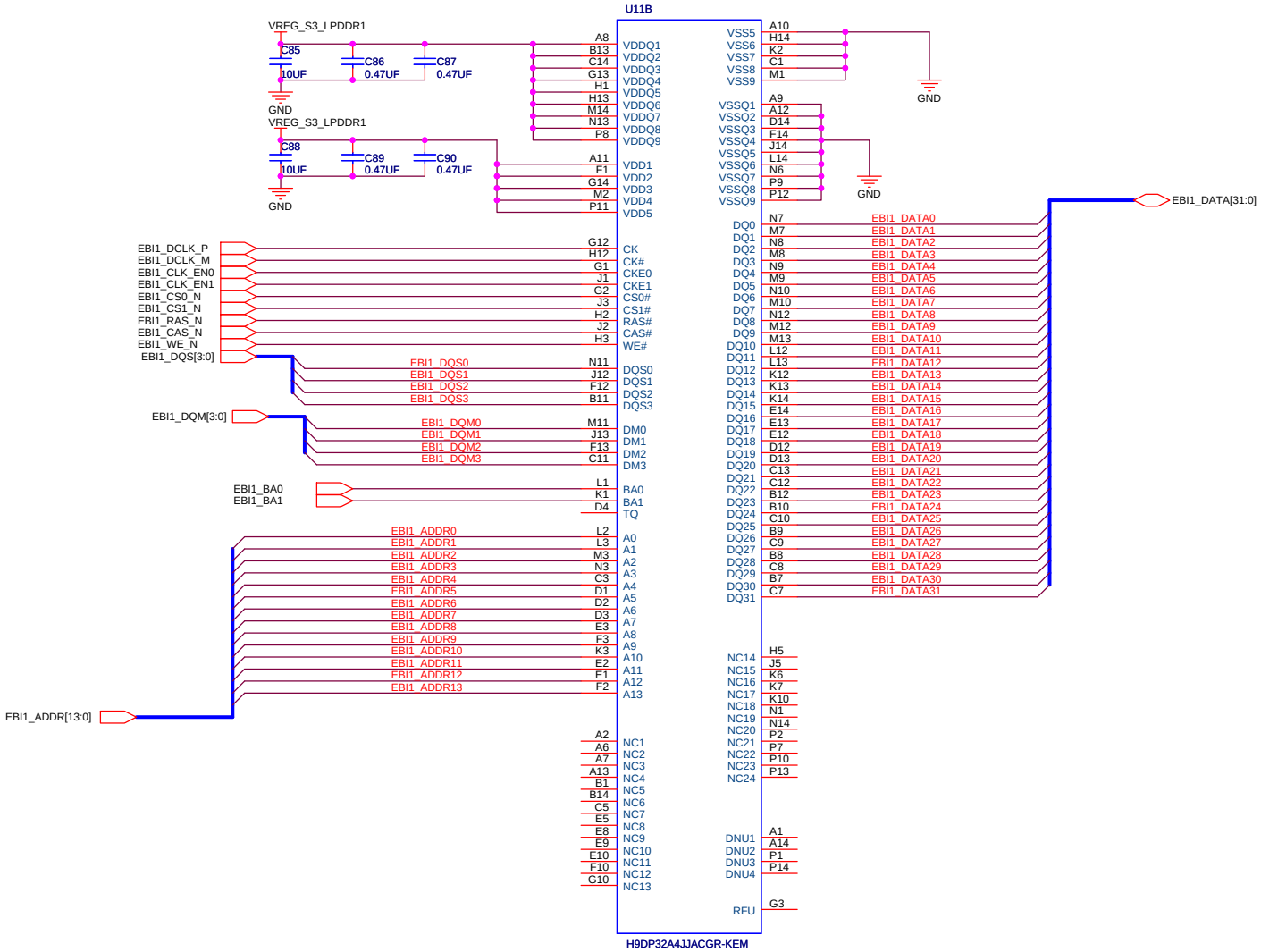

ZHNTD

Drawing Title: **Volgo7 PAD**

Page Title: **DDR SDRAM**

Size	Document Number	Rev
A3	<Doc>	001

Date: Monday, July 30, 2012 | Sheet 8 of 31

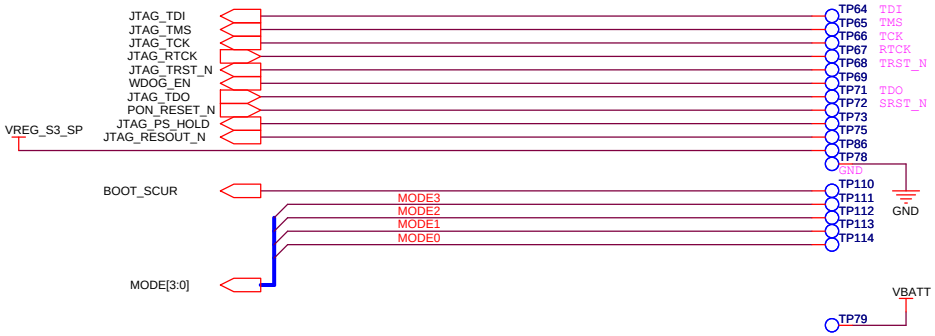

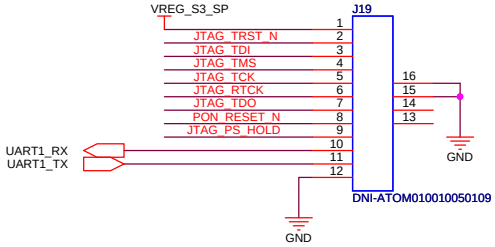

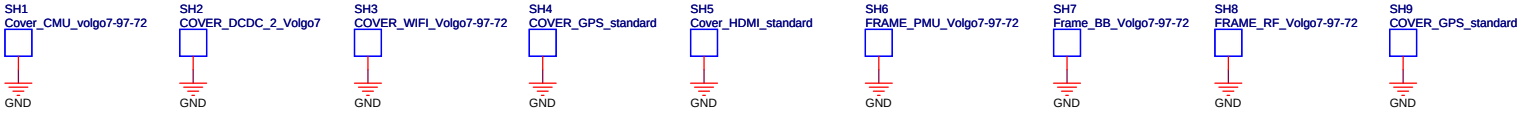

ZHNTD

Drawing Title: **Volgo7 PAD**

Page Title: **Debug Interface**

Size	Document Number	Rev
A3	<Doc>	100

Date: Monday, July 30, 2012 | Sheet 9 of 31

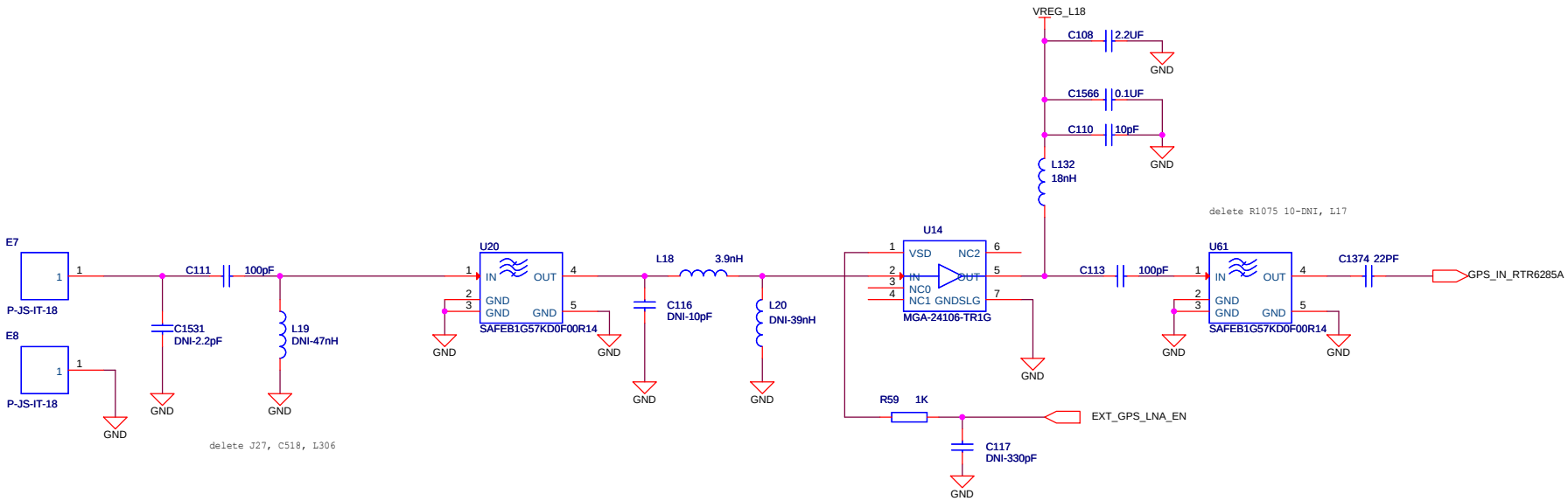

ZHNTD

Drawing Title: **Volgo7 PAD**

Page Title: **GPS Front End**

Size	Document Number	Rev
A3	<Doc>	001

Date: Monday, July 30, 2012 | Sheet 10 of 31

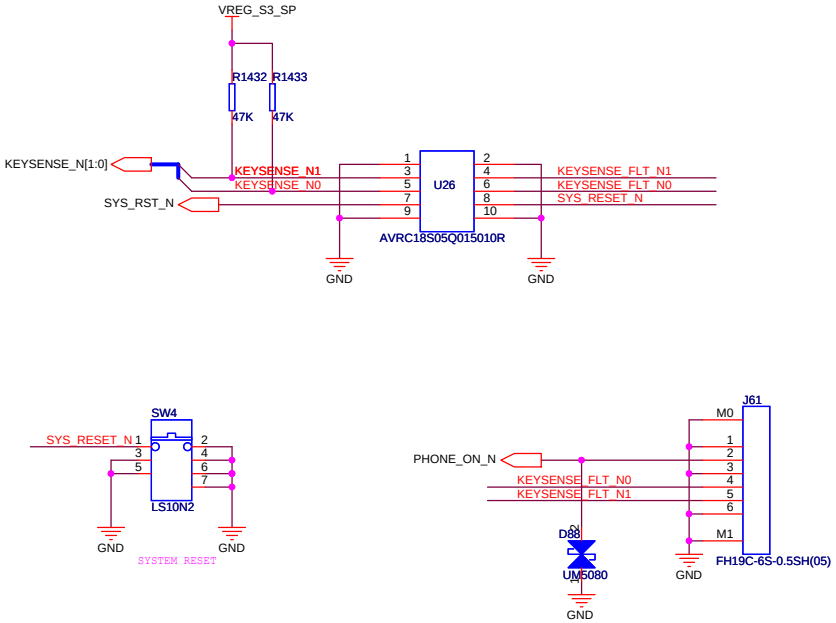

ZHNTD

Drawing Title: **Volgo7 PAD**

Page Title: **Keypad**

Size	Document Number	Rev
A3	<Doc>	001

Date: Monday, July 30, 2012 | Sheet 11 of 31

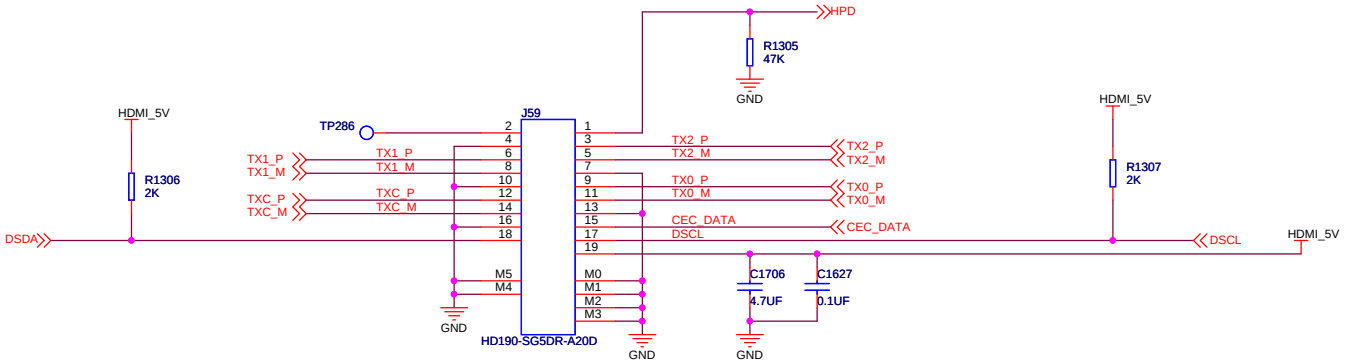

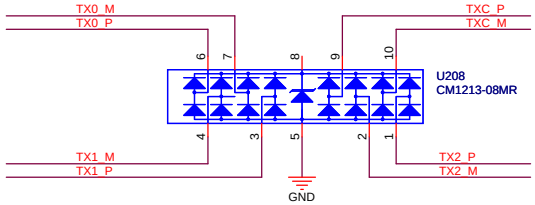

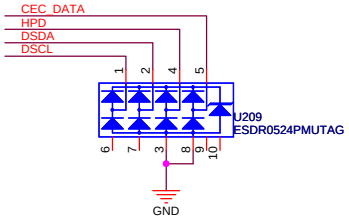

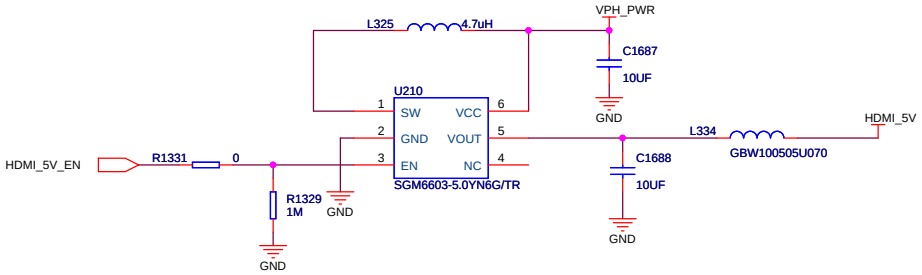

ZHNTD

Drawing Title: **Volgo7 PAD**

Page Title: **HDMI Interface**

Size	Document Number	Rev
A3	<Doc>	001

Date: Monday, July 30, 2012 | Sheet 12 of 34

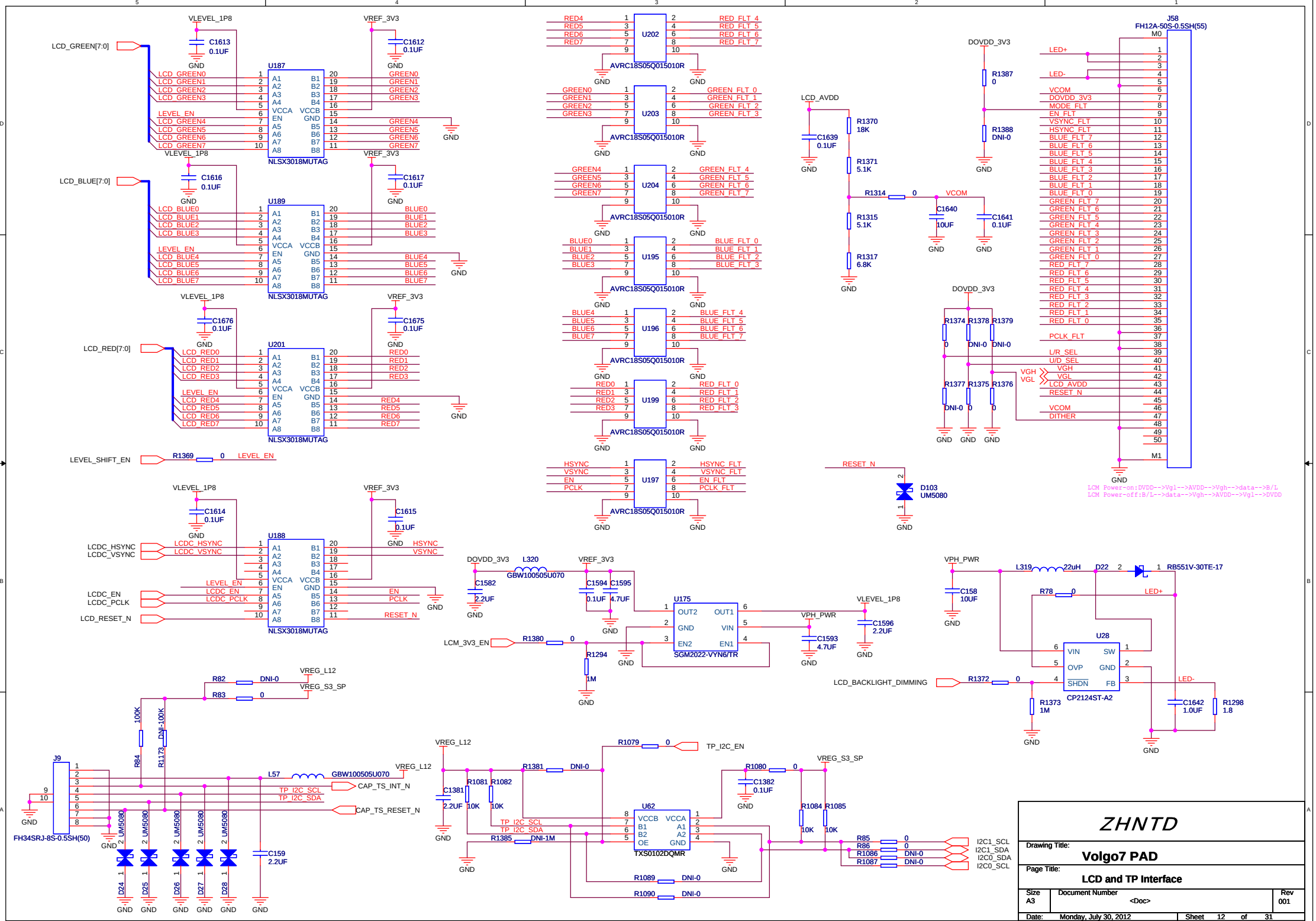
LCD_GREEN[7:0]
LCD_BLUE[7:0]
LCD_RED[7:0]
LEVEL_SHIFT_EN
R1369 0 LEVEL_EN
LCDC_HSYNC
LCDC_VSYNC
LCDC_EN
LCDC_PCLK
LCD_RESET_N
U187 U189 U201 U188
NLSX3018MUTAG
VLEVEL_1P8
VREF_3V3
U202 U203 U204 U195 U196 U199 U197
AVRC18S05Q015010R
J58
FH12A-50S-0.5SH(55)
LCD_AVDD
DOVDD_3V3
VCOM
LCM Power-on:DVDD-->Vgl-->AVDD-->Vgh-->data-->B/L
LCM Power-off:B/L-->data-->Vgh-->AVDD-->Vgl-->DVDD
D103 UM5080
L320 GBW100505U070
U175 SGM2022-VYN6/TR
LCM_3V3_EN
VPH_PWR
L319 22uH
D22 RB551V-30TE-17
U28 CP2124ST-A2
LCD_BACKLIGHT_DIMMING
VREG_L12
VREG_S3_SP
J9 FH34SRJ-8S-0.5SH(50)
L57 GBW100505U070
CAP_TS_INT_N
CAP_TS_RESET_N
TP_I2C_SCL
TP_I2C_SDA
TP_I2C_EN
U62 TXS0102DQMR
I2C1_SCL
I2C1_SDA
I2C0_SDA
I2C0_SCL
ZHNTD
Drawing Title: Volgo7 PAD
Page Title: LCD and TP Interface
Size A3
Document Number <Doc>
Rev 001
Date: Monday, July 30, 2012
Sheet 12 of 31

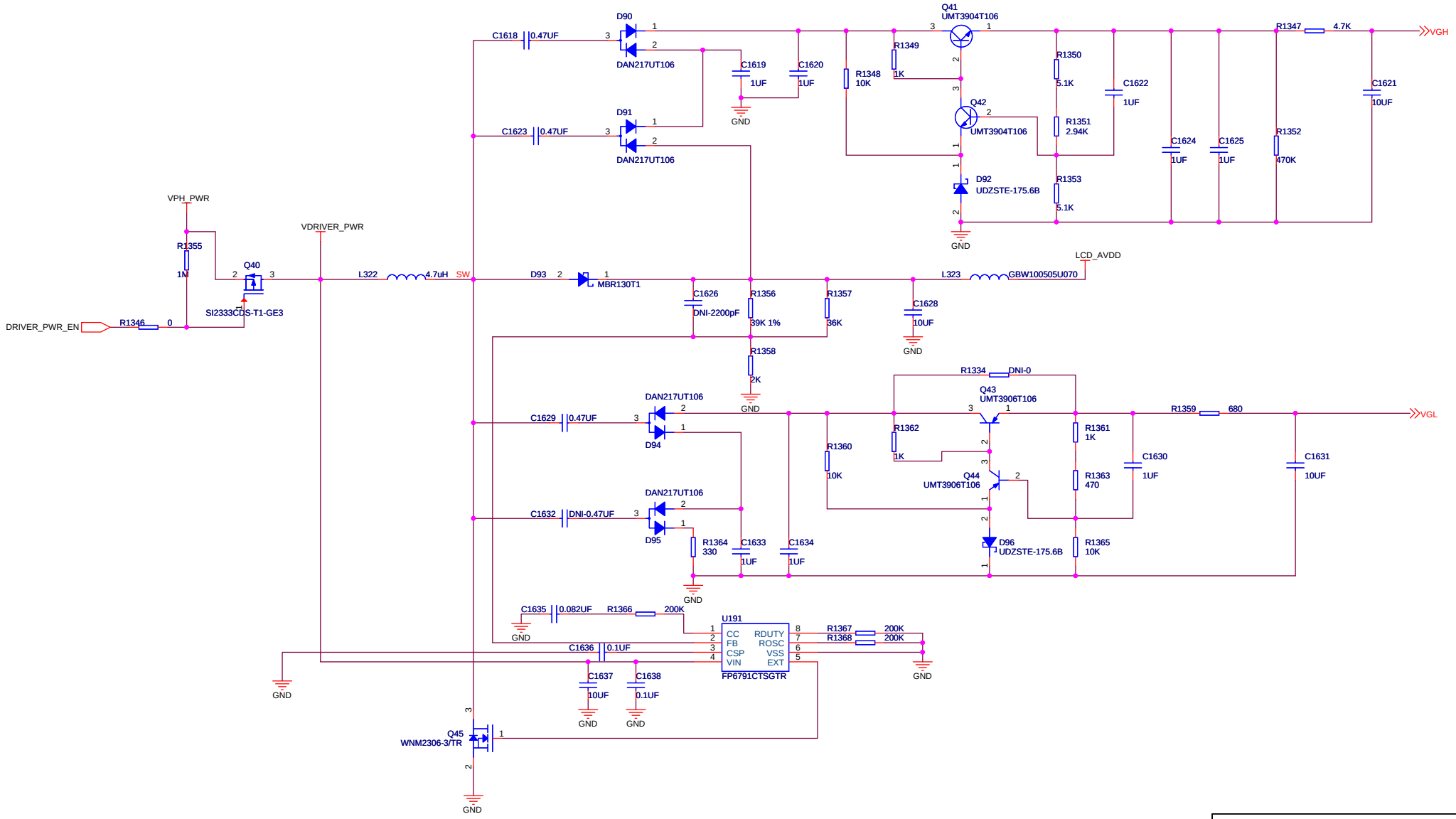

ZHNTD

Drawing Title: **Volgo7 PAD**

Page Title: **LCD DC/DC Interface**

Size	Document Number	Rev
A3	<Doc>	001

Date: Monday, July 30, 2012 | Sheet 12 of 31

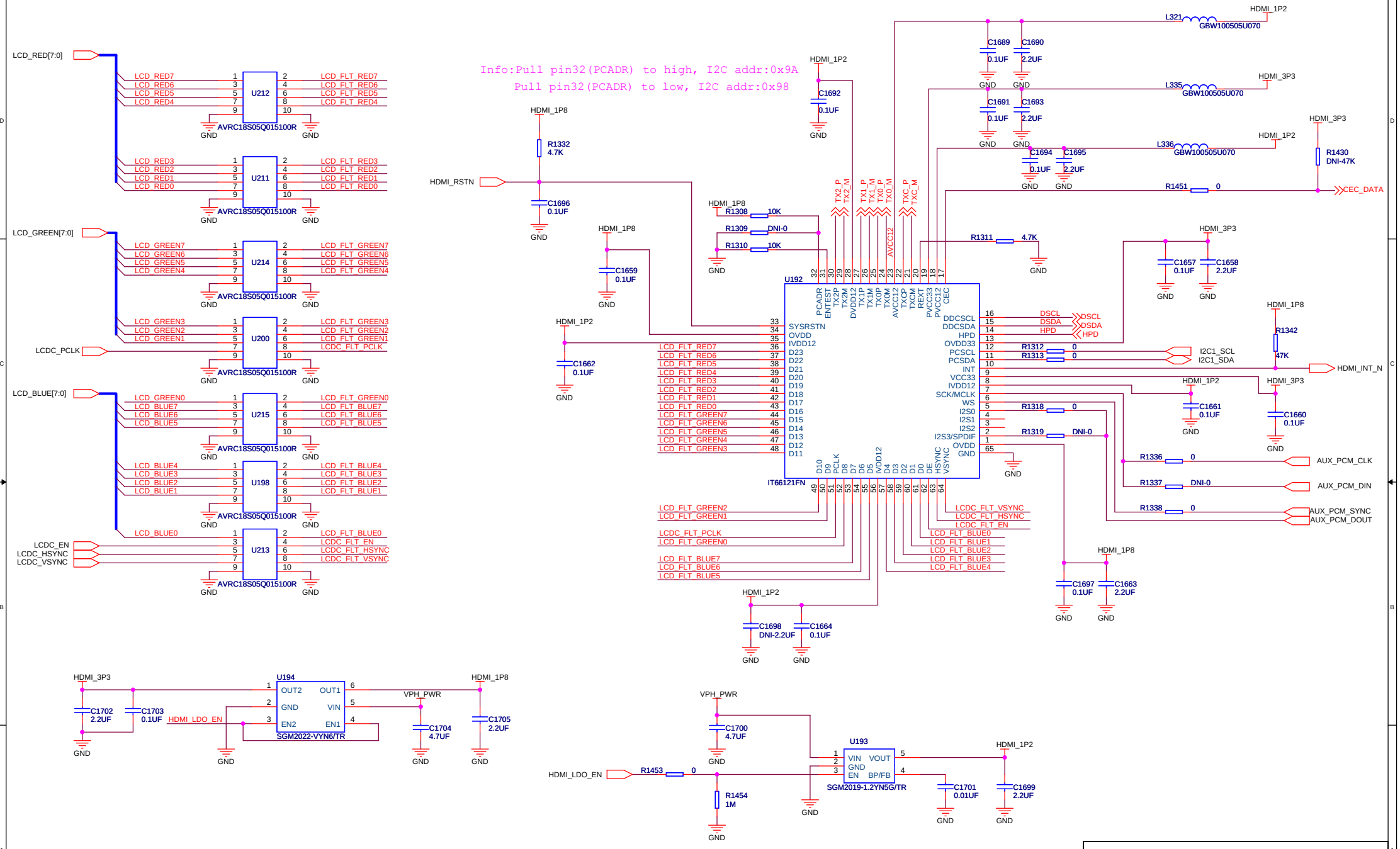

ZHNTD

Drawing Title: **Volgo7 PAD**

Page Title: **HDMI Transmitter**

Size	Document Number	Rev
A3	<Doc>	001

Date: Monday, July 30, 2012 Sheet 13 of 34

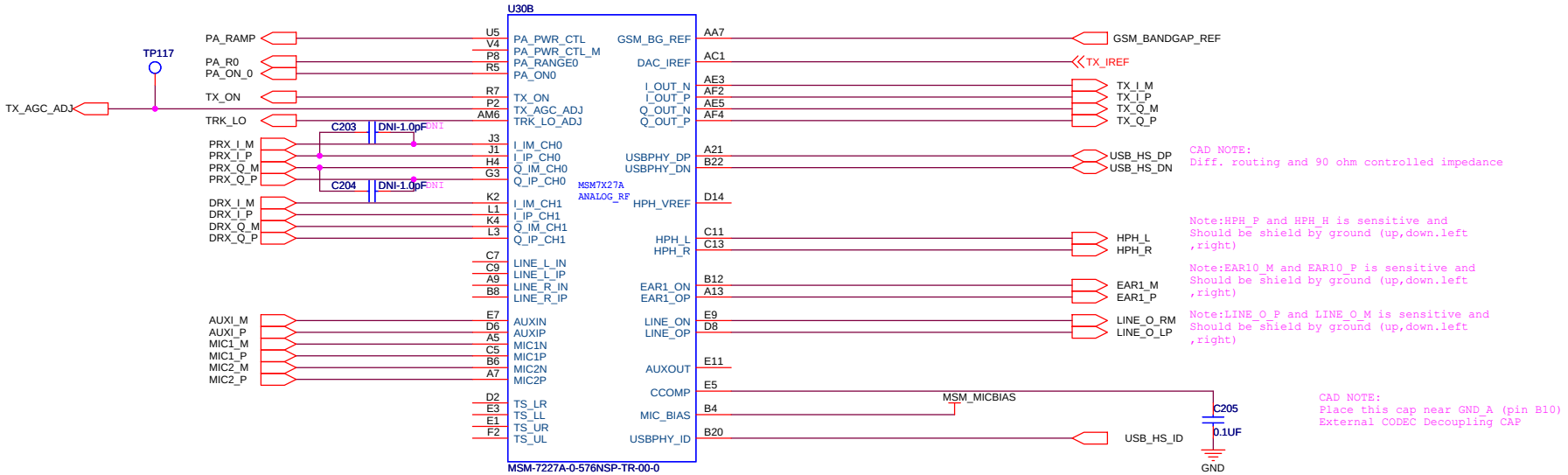

ZHNTD

Drawing Title: **Volgo7 PAD**

Page Title: **MSM7227A Analog and RF Interface**

Size	Document Number	Rev
A3	<Doc>	001

Date: Monday, July 30, 2012 | Sheet 14 of 31

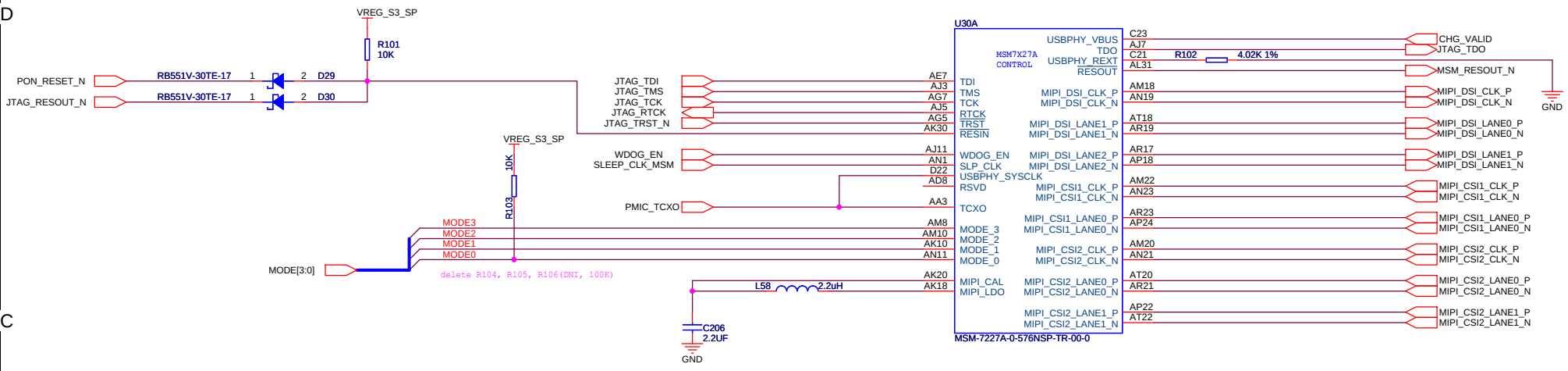

NOTES

1. MIPI internal regulator is set to Switching mode by default.
For LDO mode install 0 ohm instead of 2.2uH inductor

2. MIPI signals should be routed as differential pair of 100 ohm impedance.

ARM9 MODE[3:0]	MSM7X27A OPERATING MODE
0000	ARM9 on P_Jtag; ARM CORTEX A5 on A_Jtag
0001	ARM9 + ARM CORTEX A5 daisy chain on P_Jtag

P_Jtag = Primary JTAG port, A_Jtag = Auxilliary JTAG port

NOTES: 1. MODE(3:0) pins have internal Pull Downs.

ZHNTD

Drawing Title: Volgo7 PAD

Page Title: MSM7227A Control Interface

Size	Document Number	Rev
A3	<Doc>	001

Date: Monday, July 30, 2012 | Sheet 15 of 31

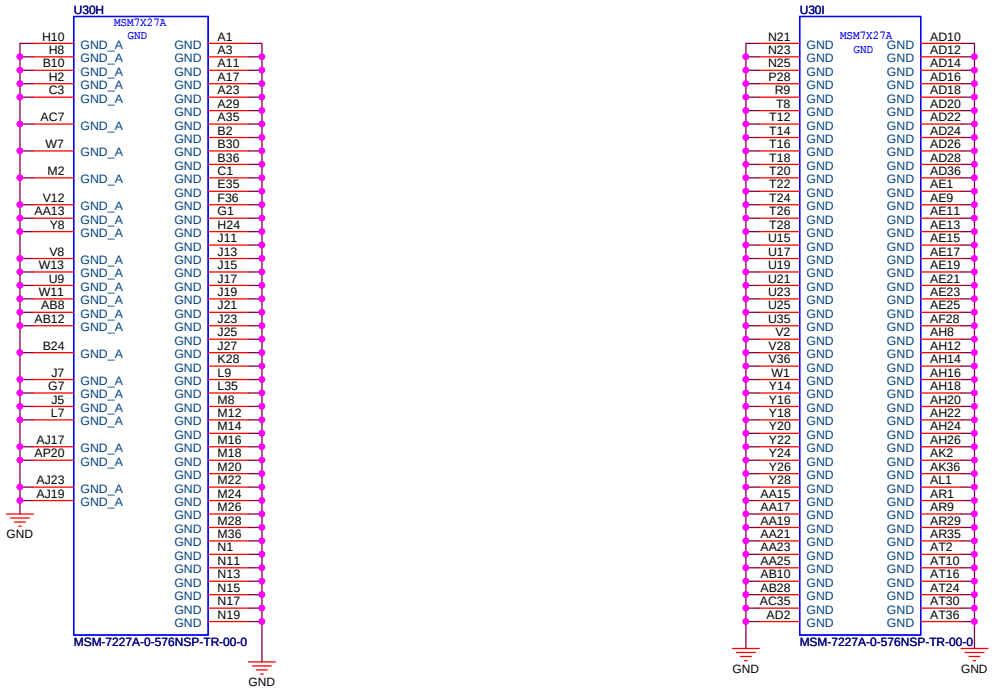

ZHNTD

Drawing Title: **Volgo7 PAD**

Page Title: **MSM7227A GND**

Size	Document Number	Rev
A3	<Doc>	001

Date: Monday, July 30, 2012 | Sheet 17 of 31

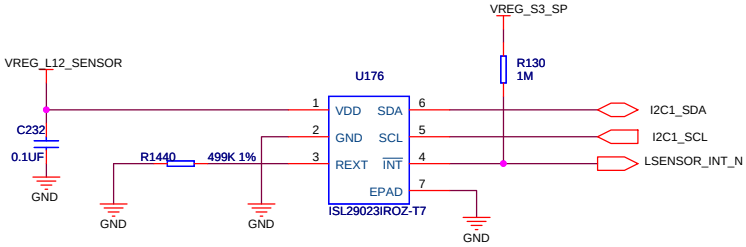

INFO: I2C SLAVE ADDRESS=0x88/0x89

ZHNTD

Drawing Title: **Volgo7 PAD**

Page Title: **Light Sensor**

Size	Document Number	Rev
A3	<Doc>	001

Date: Monday, July 30, 2012 | Sheet 17 of 34

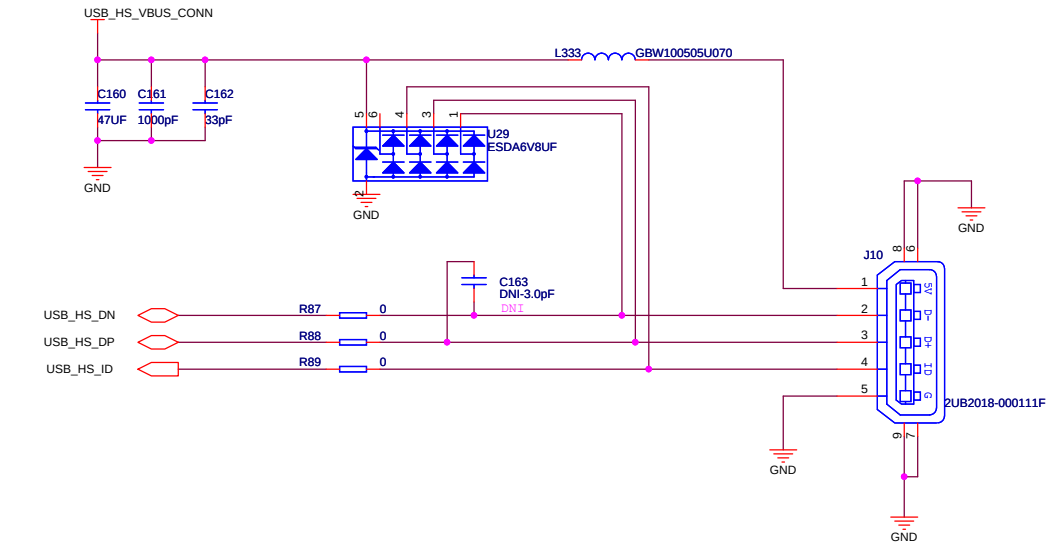

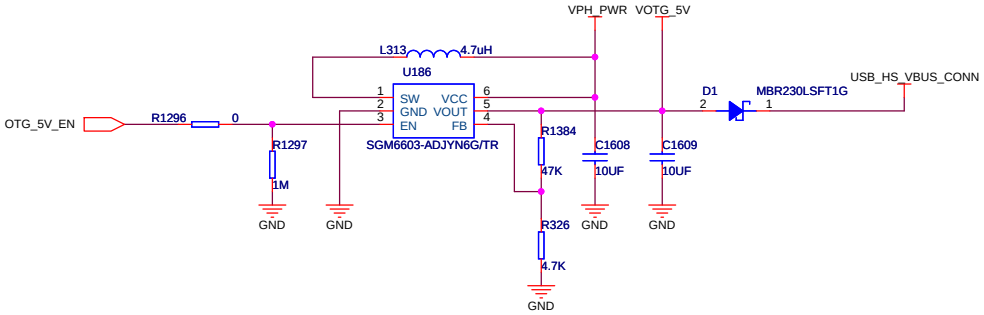

ZHNTD

Drawing Title: **Volgo7 PAD**

Page Title: **Micro USB interface**

Size	Document Number	Rev
A3	<Doc>	001

Date: Monday, July 30, 2012 | Sheet 18 of 34

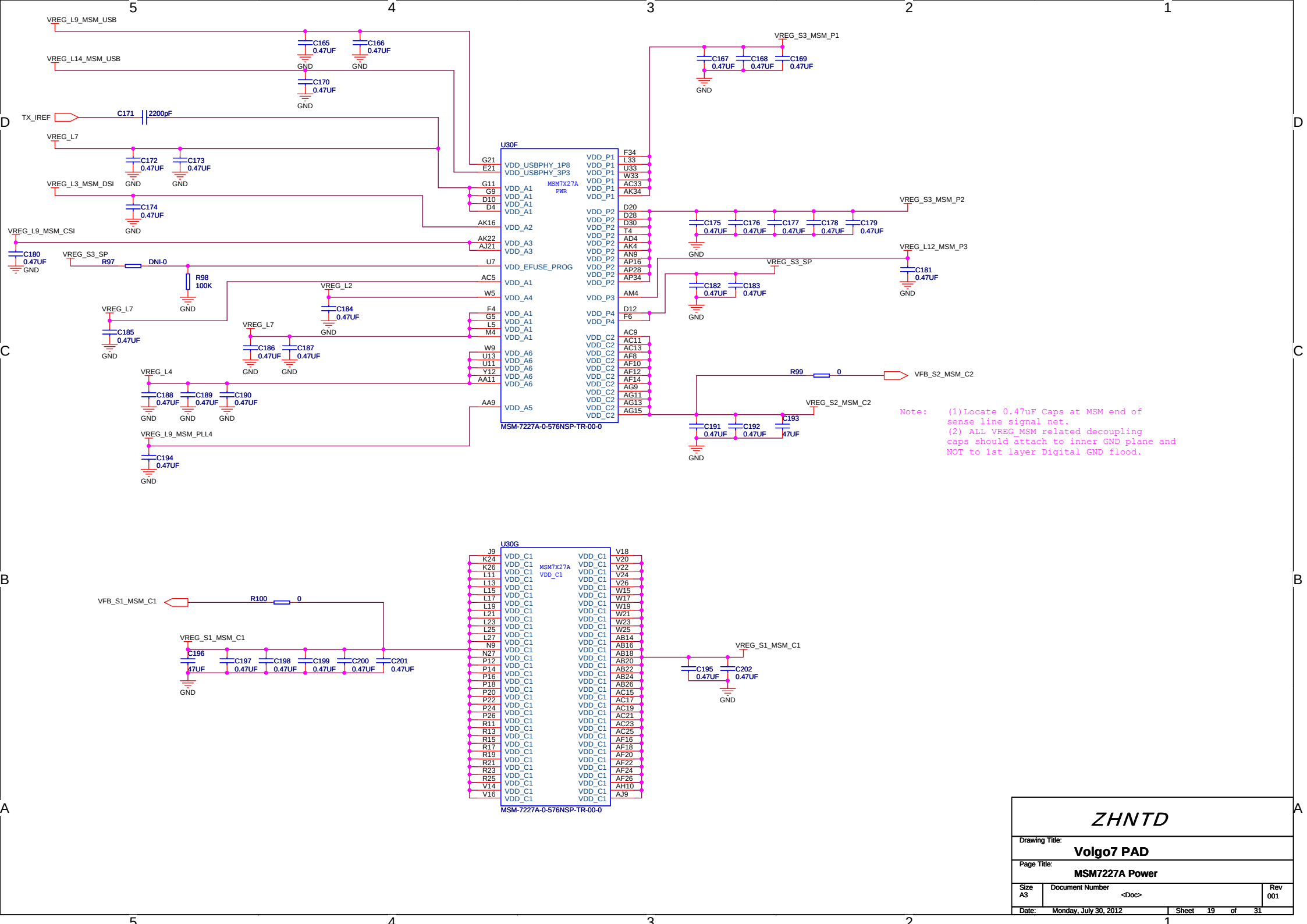
VREG_L9_MSM_USB
VREG_L14_MSM_USB
TX_IREF
VREG_L7
VREG_L3_MSM_DSI
VREG_L9_MSM_CSI
VREG_S3_SP
VREG_L2
VREG_L4
VREG_L9_MSM_PLL4
VREG_S3_MSM_P1
VREG_S3_MSM_P2
VREG_L12_MSM_P3
VREG_S2_MSM_C2
VFB_S2_MSM_C2
VFB_S1_MSM_C1
VREG_S1_MSM_C1
U30F
MSM7X27A
PWR
MSM-7227A-0-576NSP-TR-00-0
U30G
MSM7X27A
VDD_C1
MSM-7227A-0-576NSP-TR-00-0
Note: (1)Locate 0.47uF Caps at MSM end of sense line signal net.
(2) ALL VREG_MSM related decoupling caps should attach to inner GND plane and NOT to 1st layer Digital GND flood.
ZHNTD
Drawing Title:
Volgo7 PAD
Page Title:
MSM7227A Power
Size A3
Document Number <Doc>
Rev 001
Date: Monday, July 30, 2012
Sheet 19 of 31

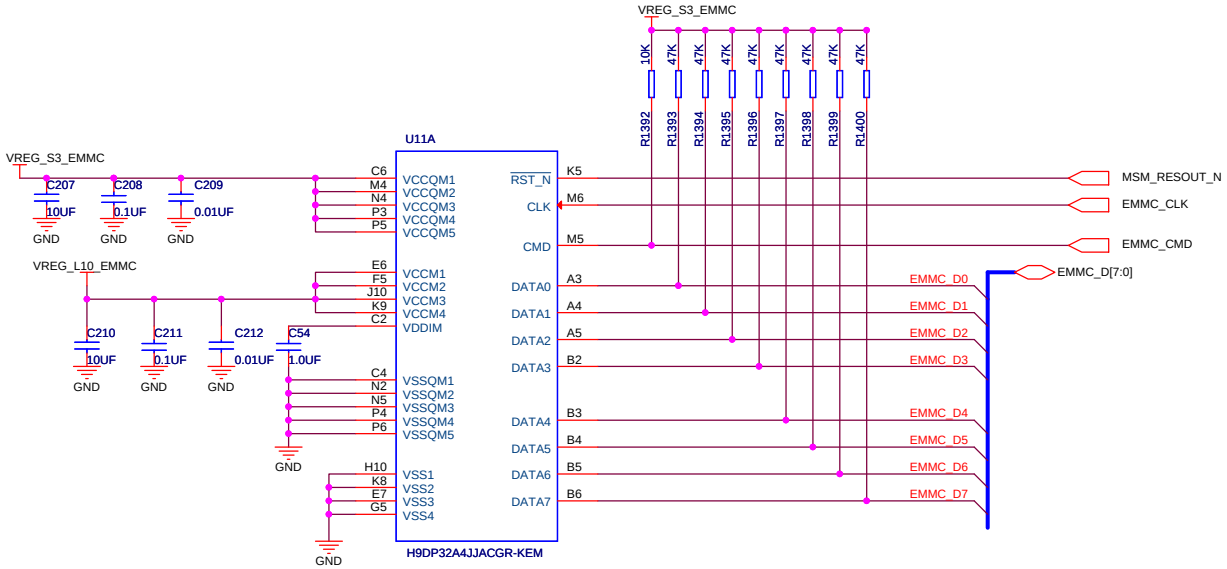

ZHNTD

Drawing Title: **Volgo7 PAD**

Page Title: **EMMC**

Size	Document Number	Rev
A3	<Doc>	001

Date: Monday, July 30, 2012 | Sheet 20 of 31

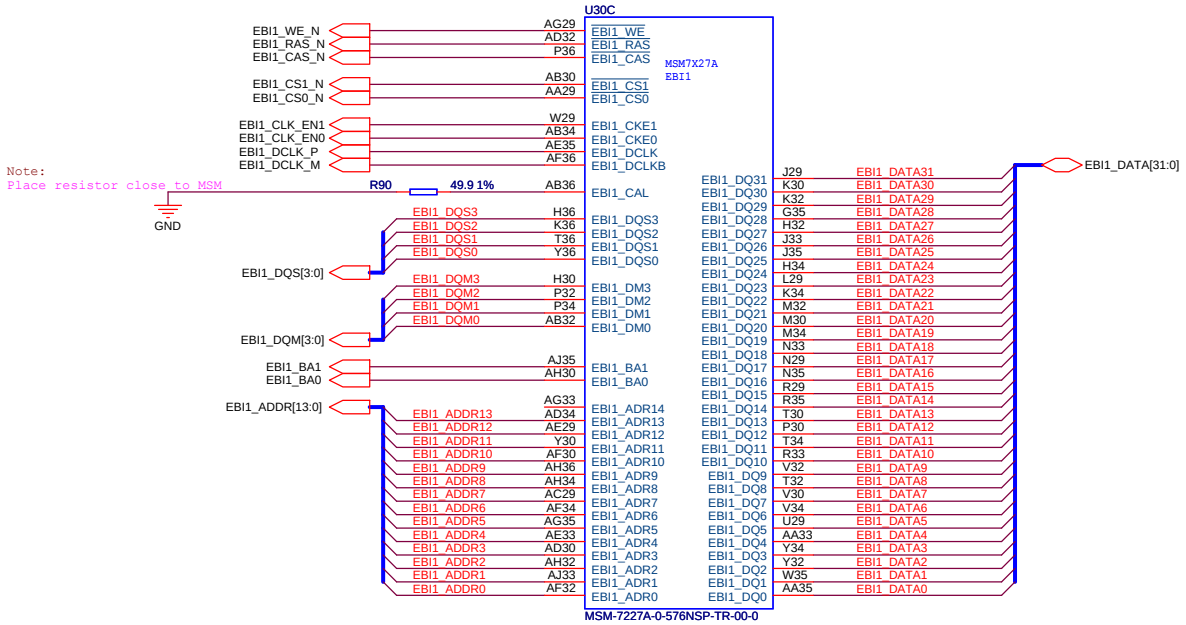

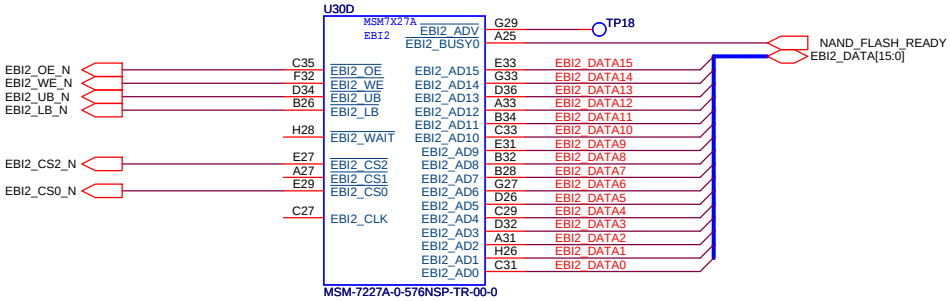

ZHNTD

Drawing Title: **Volgo7 PAD**

Page Title: **MSM7227A EBI1 and EBI2 Interface**

Size	Document Number	Rev
A3	<Doc>	001

Date: Monday, July 30, 2012 | Sheet 21 of 34

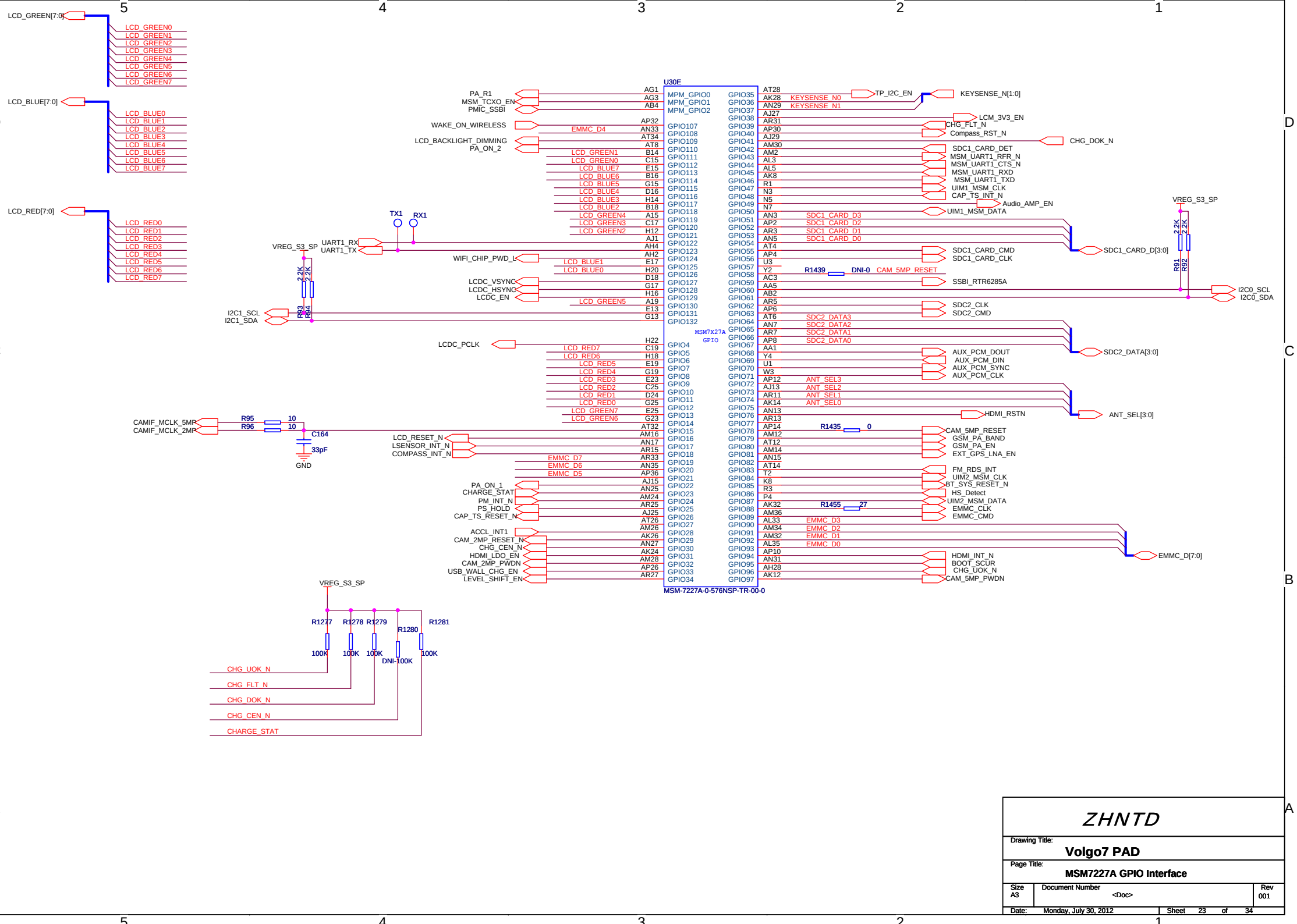

ZHNTD

Drawing Title: **Volgo7 PAD**

Page Title: **MSM7227A GPIO Interface**

Size	Document Number	Rev
A3	<Doc>	001

Date: Monday, July 30, 2012 | Sheet 23 of 34

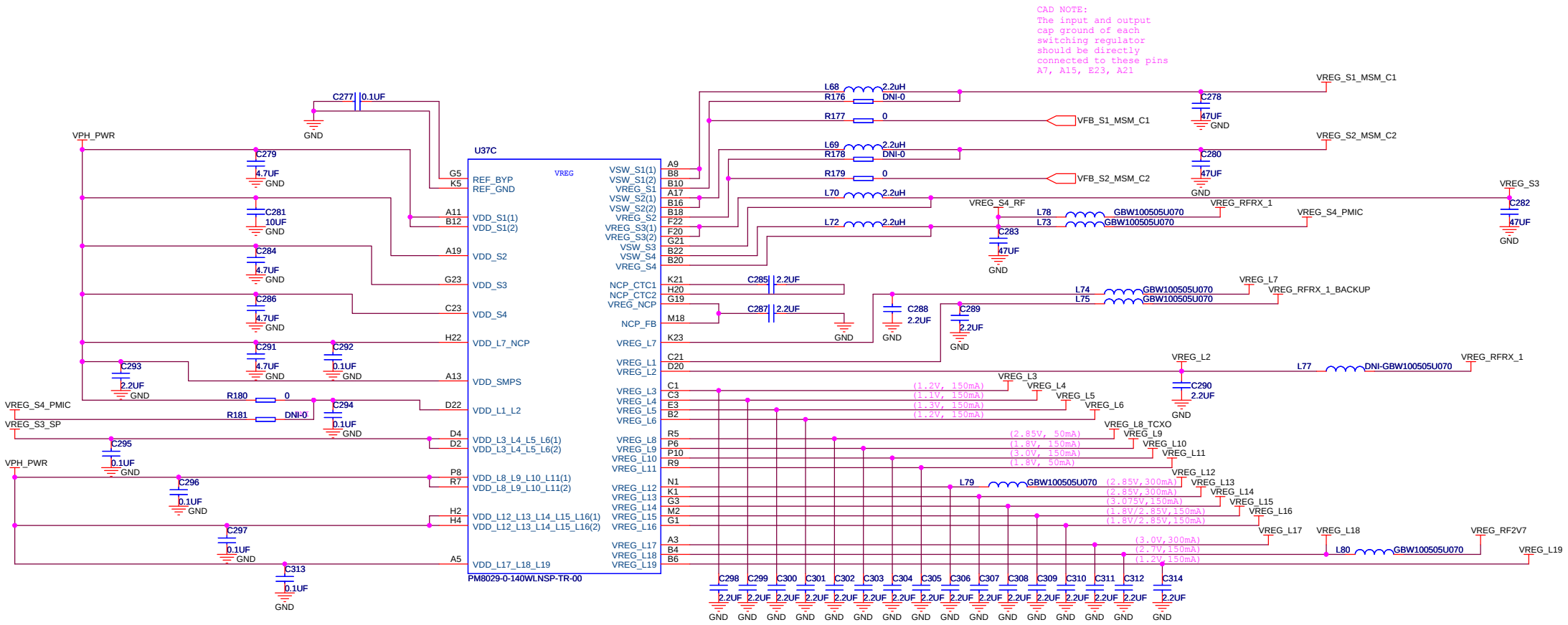

ZHNTD

Drawing Title: **Volgo7 PAD**

Page Title: **PM8029 SMSP and Linear Regulator**

Size	Document Number	Rev
A3	<Doc>	001

Date: Monday, July 30, 2012 | Sheet 24 of 31

HS2525

MODE	VC1	VC2	VC3	VC4
GSM850/EGSM TX1	H	L	L	H
DCS1800/PCS1900 TX2	H	L	L	L
GSM850 RX1	L	H	L	H
EGSM900 RX2	L	H	L	L
DCS1800 RX3	L	L	L	H
PCS1900 RX4	L	L	L	L
UMTS1 W2100	L	L	H	L
UMTS2 N/A	L	L	H	H
UMTS3 W850	L	H	H	L

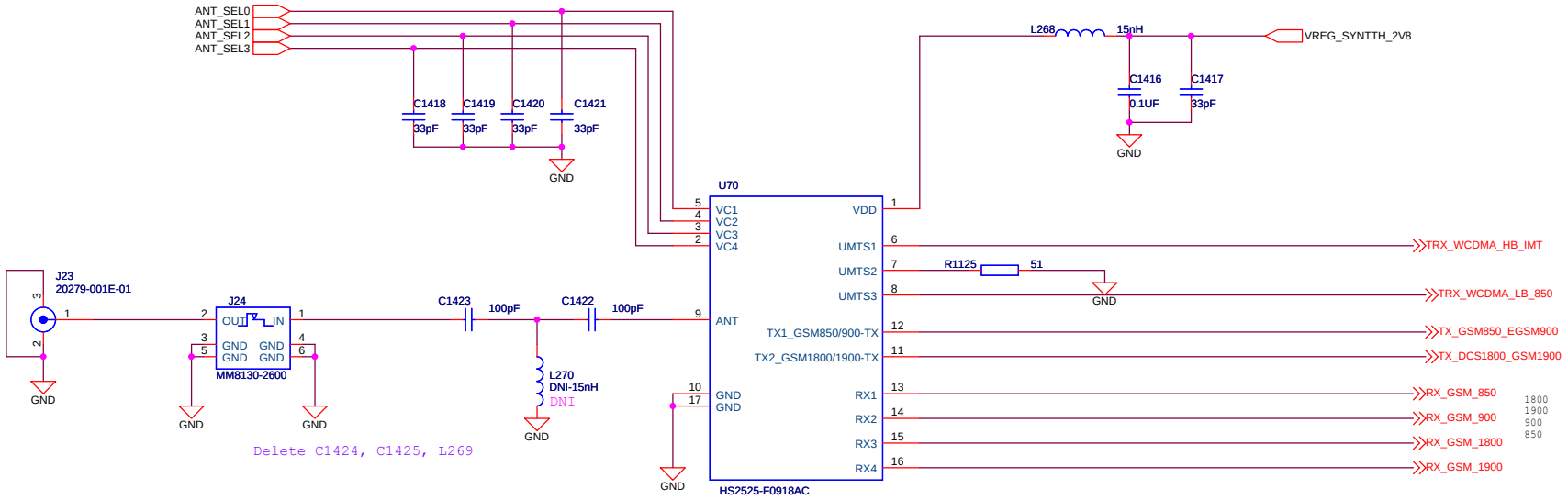

ZHNTD

Drawing Title: Volgo7 PAD

Page Title: PRIMARY ANT & Antenna Switch

Size	Document Number	Rev
A3	<Doc>	100

Date: Monday, July 30, 2012 Sheet 25 of 31

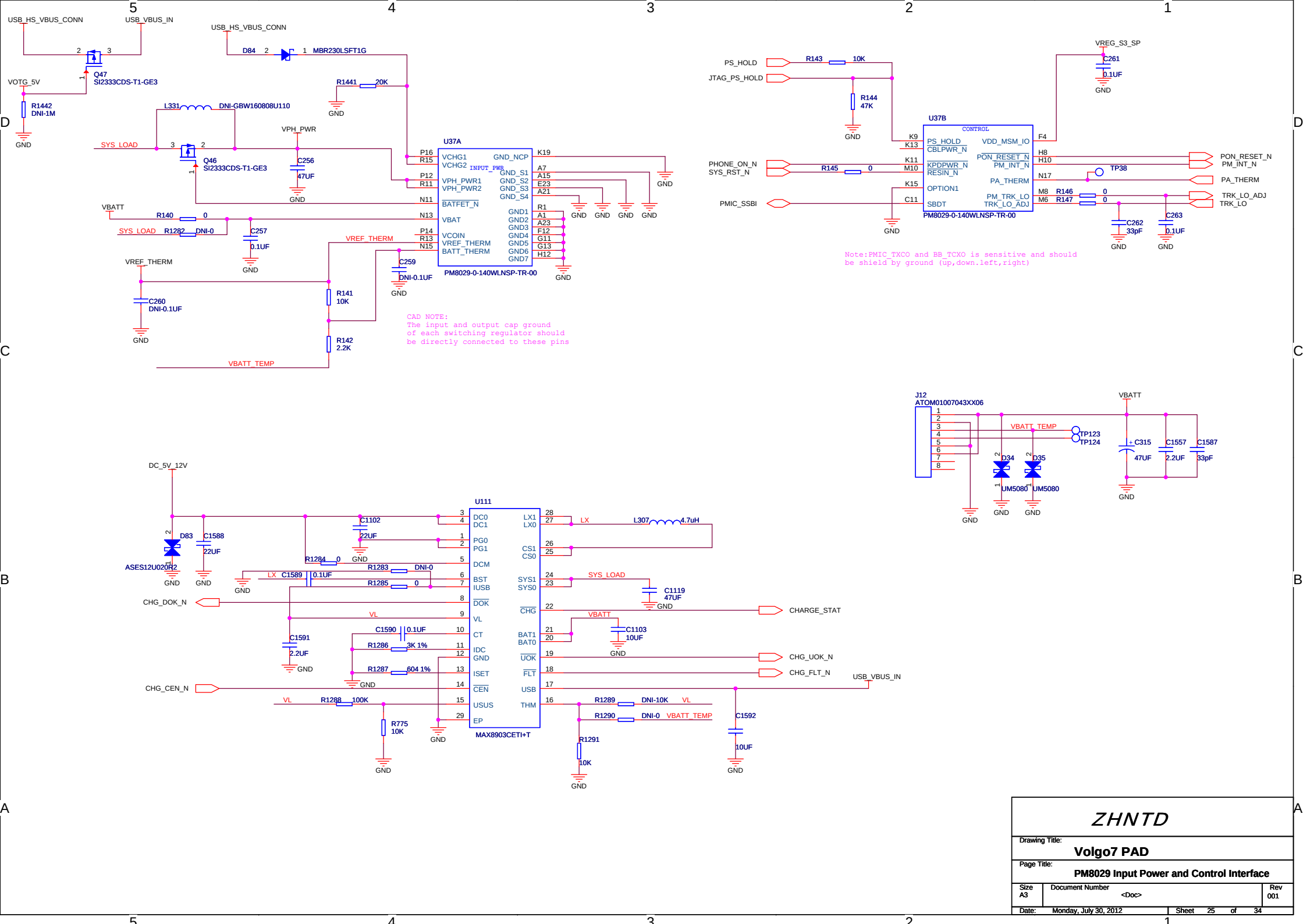

ZHNTD

Drawing Title: **Volgo7 PAD**

Page Title: **PM8029 Input Power and Control Interface**

Size	Document Number	Rev
A3	<Doc>	001

Date: Monday, July 30, 2012 | Sheet 25 of 34

PA STATE	PA_ON1
OFF	L
ON	H

POWER MODE	PA_R0 Vmode1	PA_R1 Vmode0
LOW POWER	H	H
MEDIUM POWER	L	H
HOGH POWER	L	L

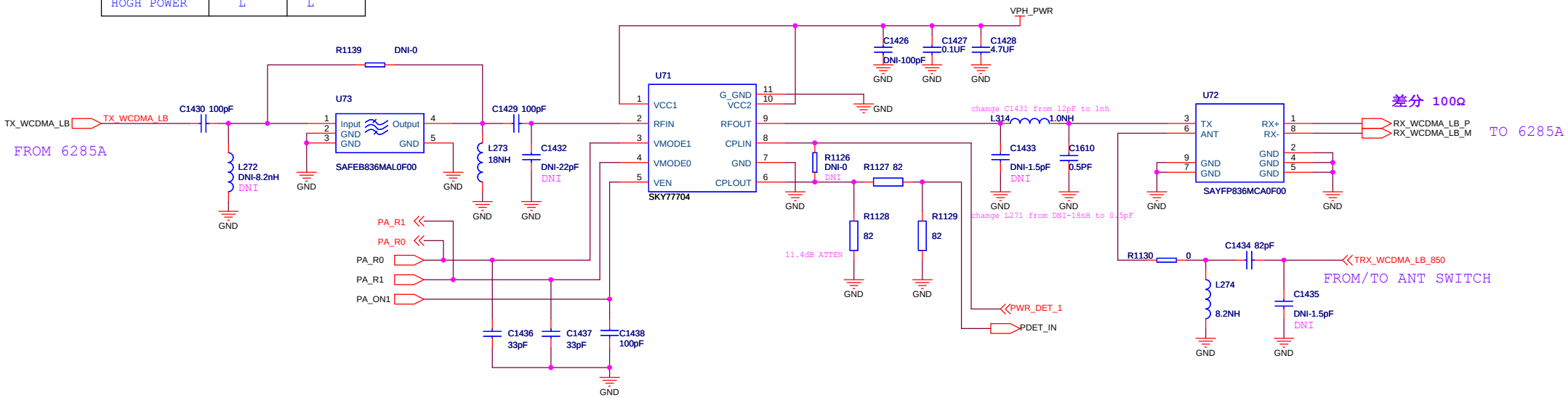

ZHNTD

Drawing Title: Volgo7 PAD

Page Title: BC5_UMTS850 PA

Size	Document Number	Rev
A3	<Doc>	100

Date: Monday, July 30, 2012 | Sheet 26 of 31

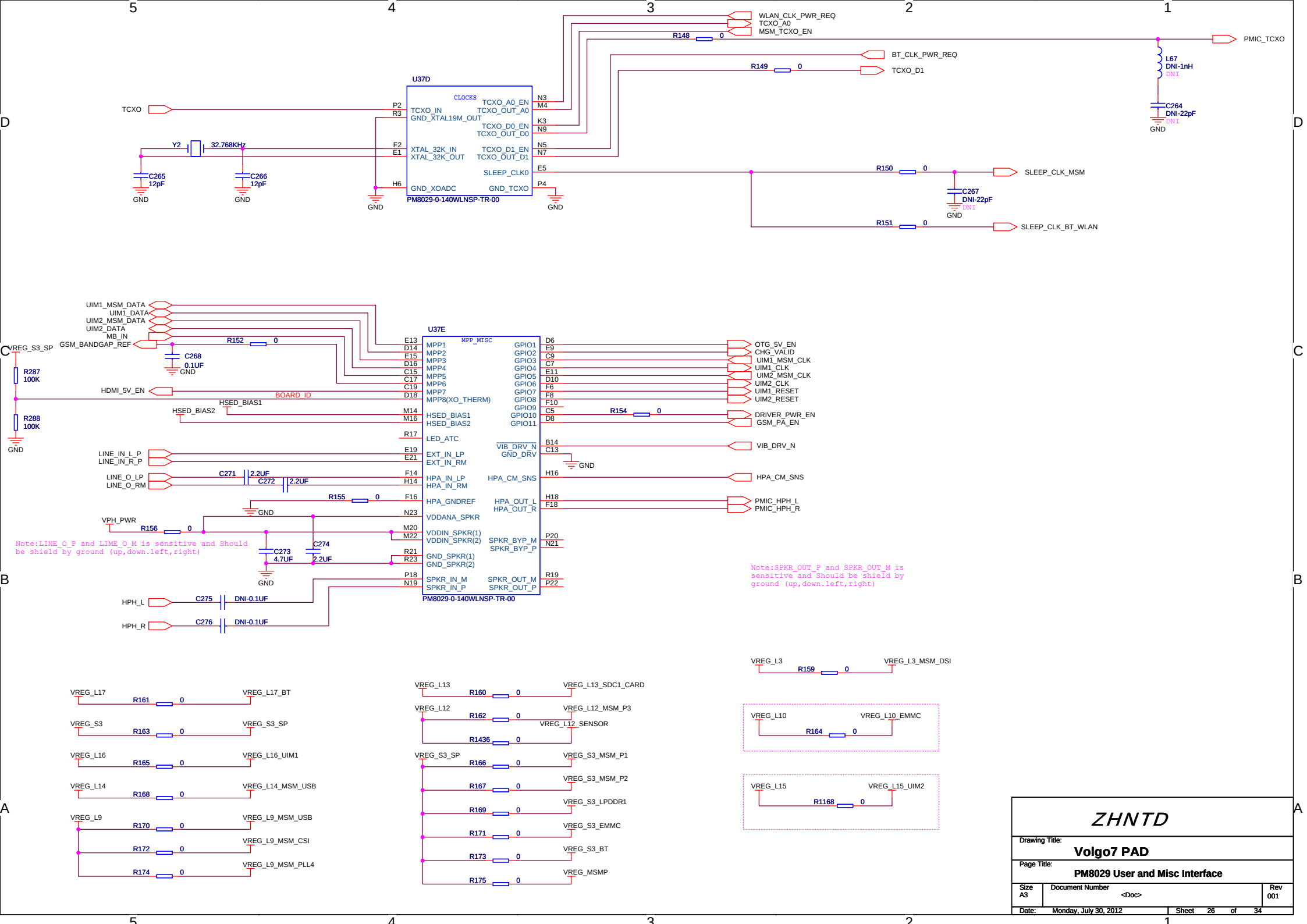
U37D
CLOCKS
TCXO_IN
GND_XTAL19M_OUT
XTAL_32K_IN
XTAL_32K_OUT
GND_XOADC
TCXO_A0_EN
TCXO_OUT_A0
TCXO_D0_EN
TCXO_OUT_D0
TCXO_D1_EN
TCXO_OUT_D1
SLEEP_CLK0
GND_TCXO
PM8029-0-140WLNSP-TR-00
TCXO
Y2
32.768KHz
C265
12pF
C266
12pF
GND
WLAN_CLK_PWR_REQ
TCXO_A0
MSM_TCXO_EN
R148
PMIC_TCXO
BT_CLK_PWR_REQ
R149
TCXO_D1
L67
DNI-1nH
DNI
C264
DNI-22pF
R150
SLEEP_CLK_MSM
C267
DNI-22pF
R151
SLEEP_CLK_BT_WLAN
U37E
MPP_MISC
MPP1
MPP2
MPP3
MPP4
MPP5
MPP6
MPP7
MPP8(XO_THERM)
HSED_BIAS1
HSED_BIAS2
LED_ATC
EXT_IN_LP
EXT_IN_RM
HPA_IN_LP
HPA_IN_RM
HPA_GNDREF
VDDANA_SPKR
VDDIN_SPKR(1)
VDDIN_SPKR(2)
GND_SPKR(1)
GND_SPKR(2)
SPKR_IN_M
SPKR_IN_P
GPIO1
GPIO2
GPIO3
GPIO4
GPIO5
GPIO6
GPIO7
GPIO8
GPIO9
GPIO10
GPIO11
VIB_DRV_N
GND_DRV
HPA_CM_SNS
HPA_OUT_L
HPA_OUT_R
SPKR_BYP_M
SPKR_BYP_P
SPKR_OUT_M
SPKR_OUT_P
PM8029-0-140WLNSP-TR-00
UIM1_MSM_DATA
UIM1_DATA
UIM2_MSM_DATA
UIM2_DATA
MB_IN
GSM_BANDGAP_REF
VREG_S3_SP
R152
C268
0.1UF
R287
100K
R288
100K
HDMI_5V_EN
BOARD_ID
HSED_BIAS1
HSED_BIAS2
LINE_IN_L_P
LINE_IN_R_P
LINE_O_LP
LINE_O_RM
C271
2.2UF
C272
2.2UF
R155
VPH_PWR
R156
C273
4.7UF
C274
2.2UF
Note:LINE_O_P and LIME_O_M is sensitive and Should be shield by ground (up,down.left,right)
HPH_L
C275
DNI-0.1UF
HPH_R
C276
DNI-0.1UF
OTG_5V_EN
CHG_VALID
UIM1_MSM_CLK
UIM1_CLK
UIM2_MSM_CLK
UIM2_CLK
UIM1_RESET
UIM2_RESET
R154
DRIVER_PWR_EN
GSM_PA_EN
VIB_DRV_N
HPA_CM_SNS
PMIC_HPH_L
PMIC_HPH_R
Note:SPKR_OUT_P and SPKR_OUT_M is sensitive and Should be shield by ground (up,down.left,right)
VREG_L17
R161
VREG_L17_BT
VREG_S3
R163
VREG_S3_SP
VREG_L16
R165
VREG_L16_UIM1
VREG_L14
R168
VREG_L14_MSM_USB
VREG_L9
R170
VREG_L9_MSM_USB
R172
VREG_L9_MSM_CSI
R174
VREG_L9_MSM_PLL4
VREG_L13
R160
VREG_L13_SDC1_CARD
VREG_L12
R162
VREG_L12_MSM_P3
VREG_L12_SENSOR
R1436
VREG_S3_SP
R166
VREG_S3_MSM_P1
R167
VREG_S3_MSM_P2
R169
VREG_S3_LPDDR1
R171
VREG_S3_EMMC
R173
VREG_S3_BT
R175
VREG_MSMP
VREG_L3
R159
VREG_L3_MSM_DSI
VREG_L10
R164
VREG_L10_EMMC
VREG_L15
R1168
VREG_L15_UIM2
ZHNTD
Drawing Title:
Volgo7 PAD
Page Title:
PM8029 User and Misc Interface
Size
A3
Document Number
<Doc>
Rev
001
Date:
Monday, July 30, 2012
Sheet
26
of
34

PA STATE	PA_ON0
OFF	L
ON	H

POWER MODE	PA_R0 Vmode1	PA_R1 Vmode0
LOW POWER	H	H
MEDIUM POWER	L	H
HOGH POWER	L	L

CAD NOTE:
Route PA_R0 and PA_R1 and all PA ON lines as RF sensitive

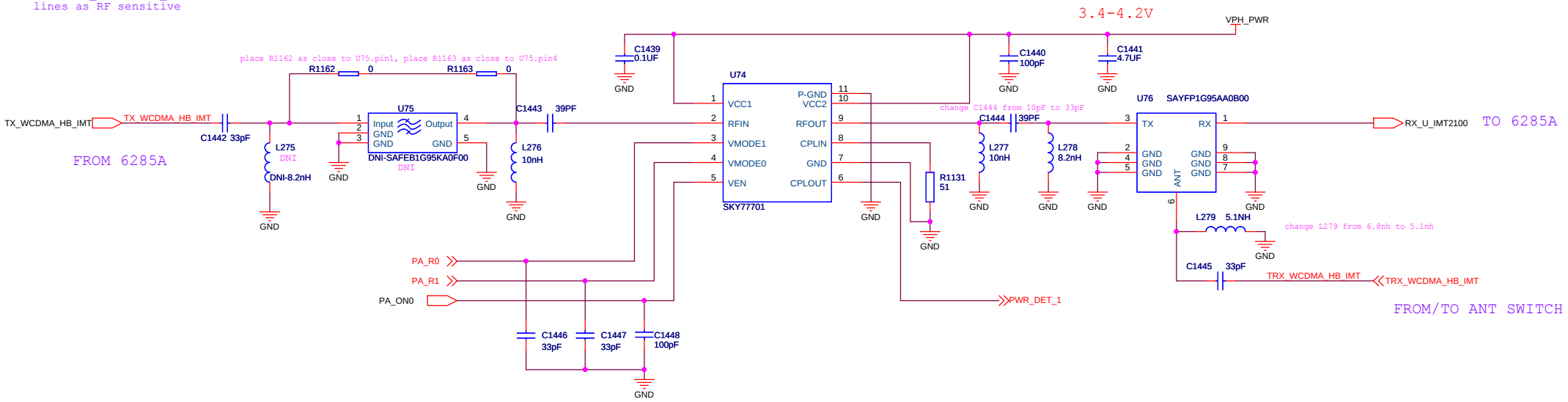

ZHNTD

Drawing Title: Volgo7 PAD

Page Title: BC1_UMTS2100 PA

Size	Document Number	Rev
A3	<Doc>	100

Date: Monday, July 30, 2012 | Sheet 27 of 31

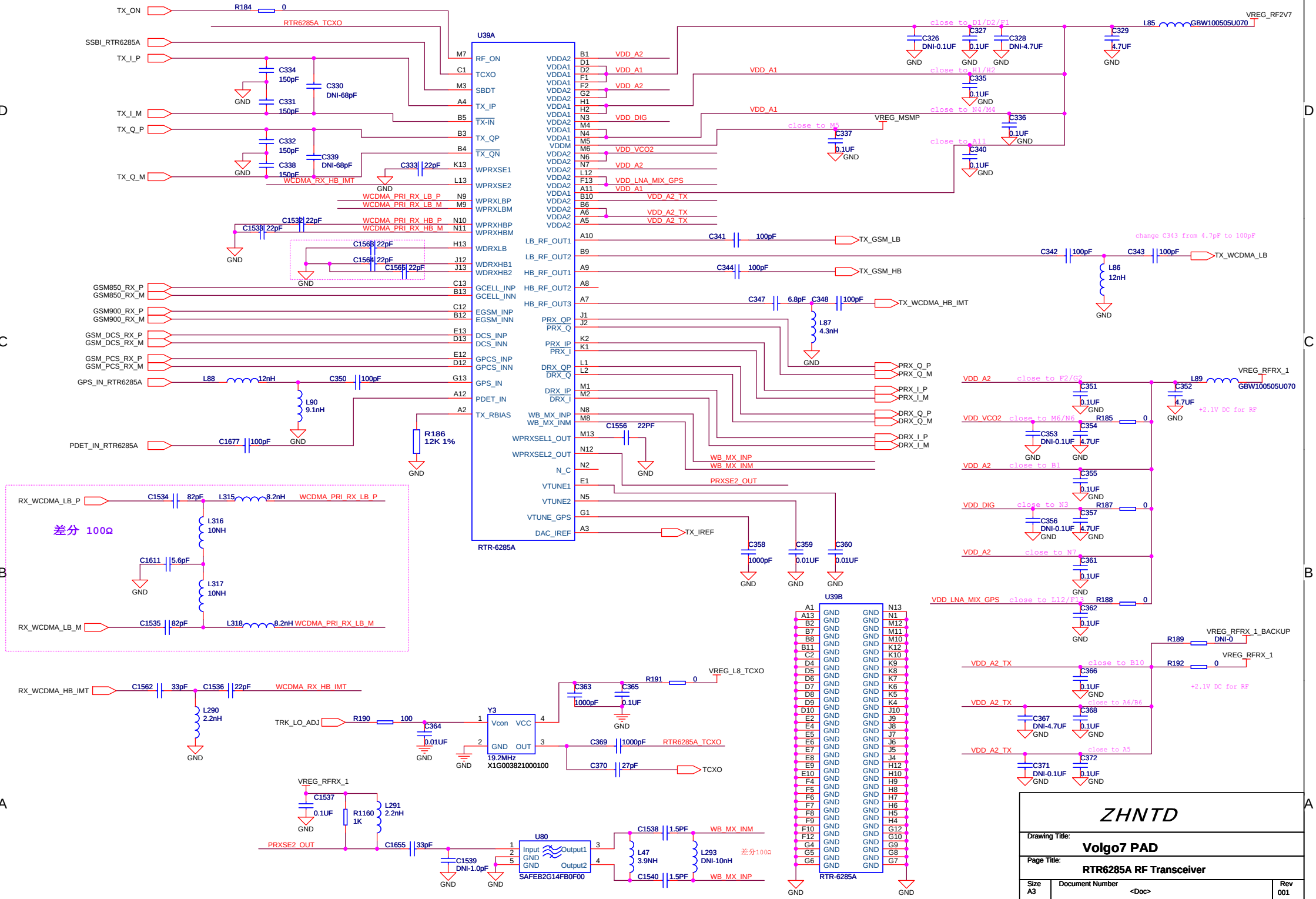
U39A
RTR-6285A
U39B
RTR-6285A
U80
SAFEB2G14FB0F00
Y3
19.2MHz
X1G003821000100
差分 100Ω
差分100Ω
ZHNTD
Drawing Title:
Volgo7 PAD
Page Title:
RTR6285A RF Transceiver
Size
A3
Document Number
<Doc>
Rev
001
Date:
Monday, July 30, 2012
Sheet 29 of 31

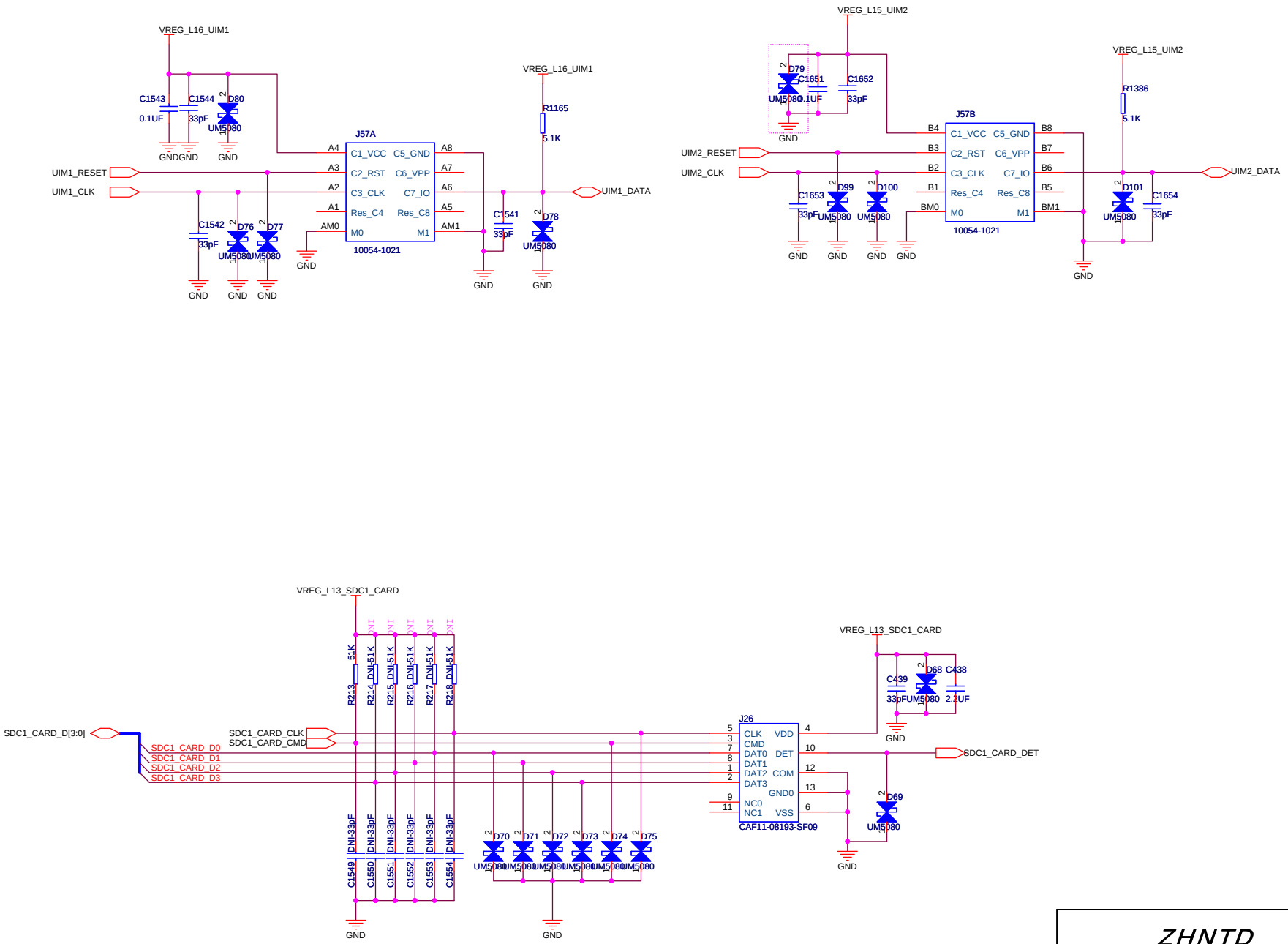

ZHNTD

Drawing Title: **Volgo7 PAD**

Page Title: **RSIM and T-Flash Interface**

Size	Document Number	Rev
A3	<Doc>	001

Date: Monday, July 30, 2012 Sheet 29 of 31

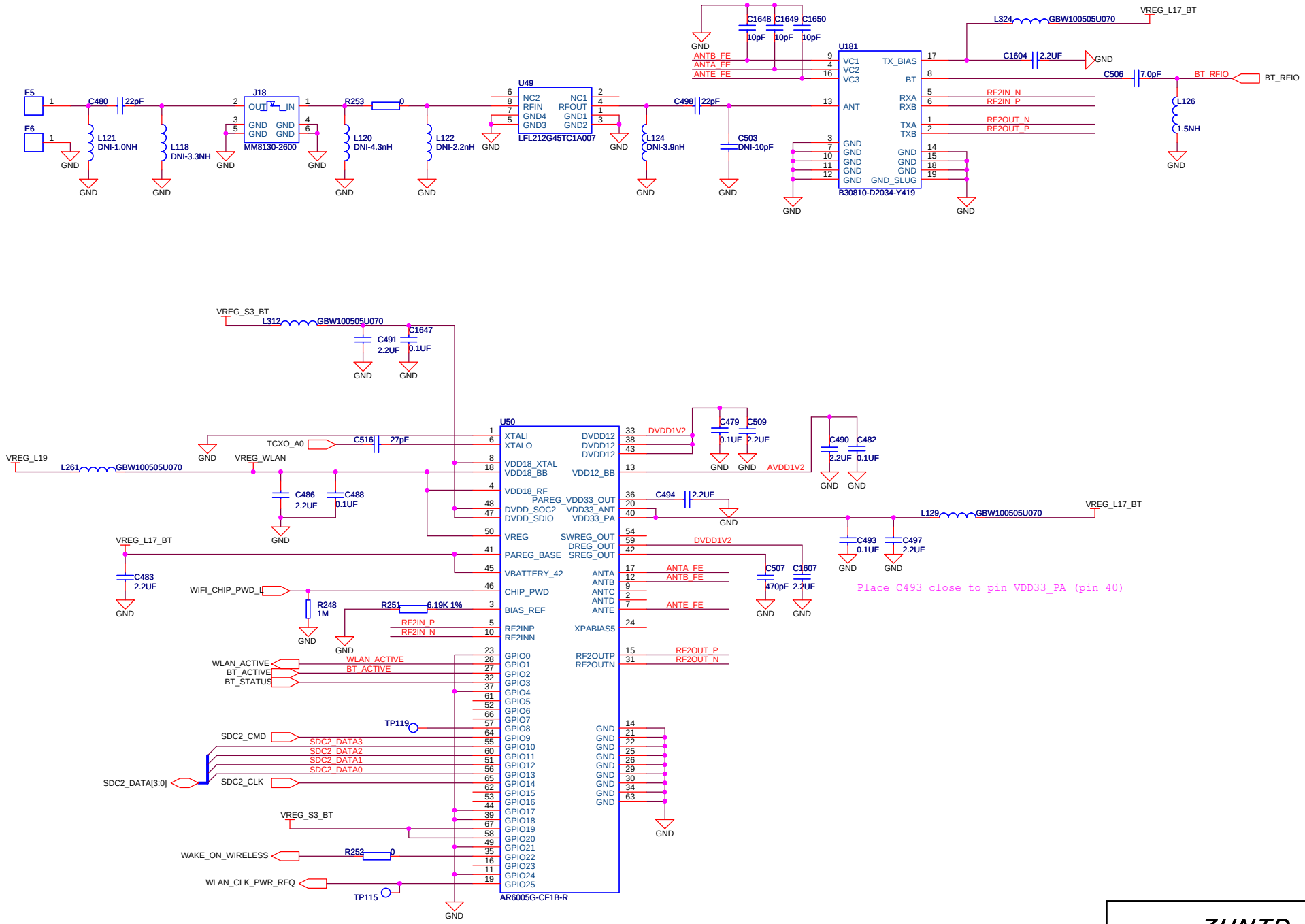

ZHNTD

Drawing Title: Volgo7 PAD

Page Title: WLAN

Size	Document Number	Rev
A3	<Doc>	001

Date: Monday, July 30, 2012 | Sheet 31 of 31

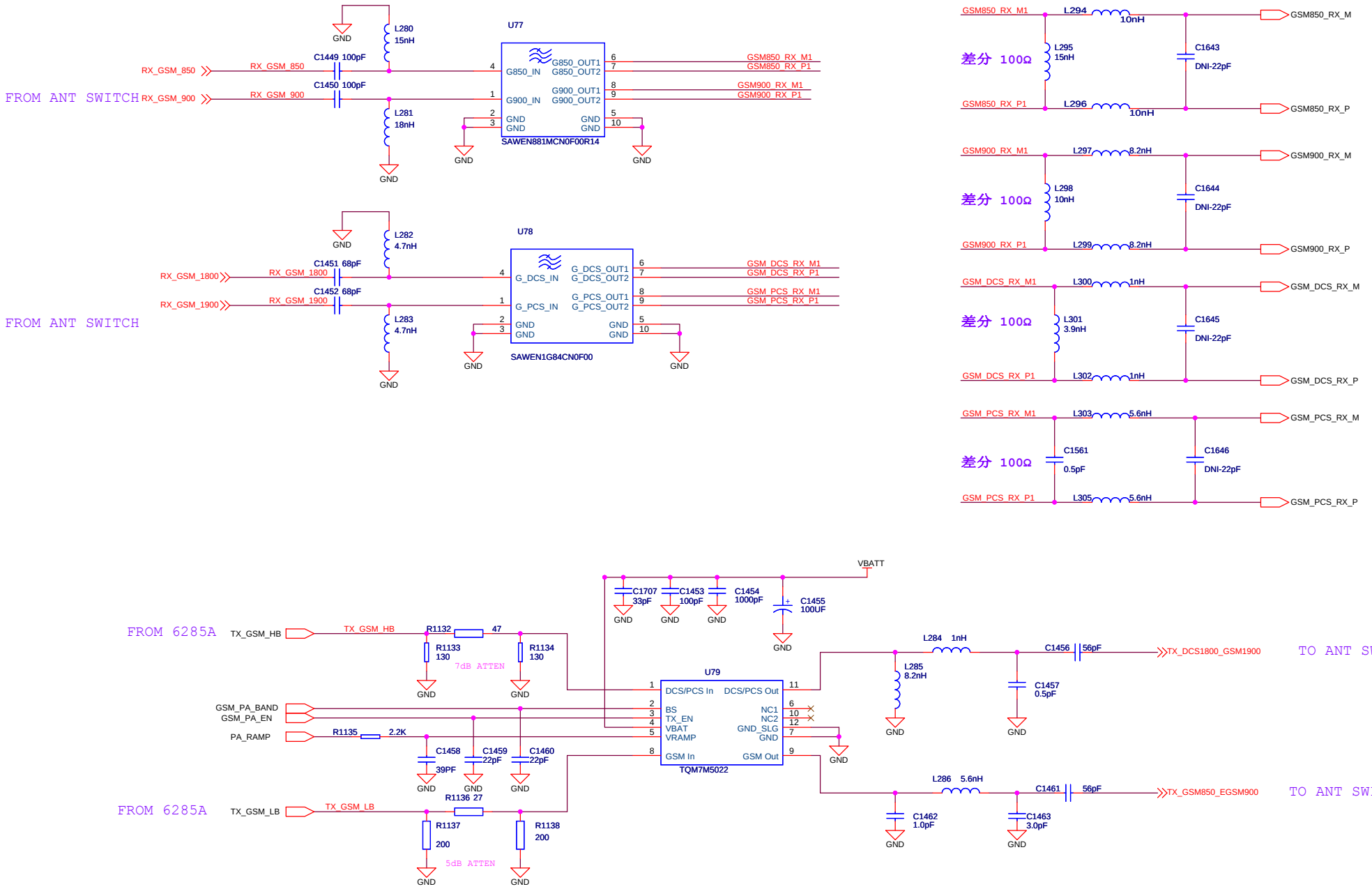

ZHNTD

Drawing Title: **Volgo7 PAD**

Page Title: **GSM QUAD BAND PA and Rx SAW Filter**

Size	Document Number	Rev
A3	<Doc>	100

Date: Monday, July 30, 2012 | Sheet 31 of 34