303.875MHZ

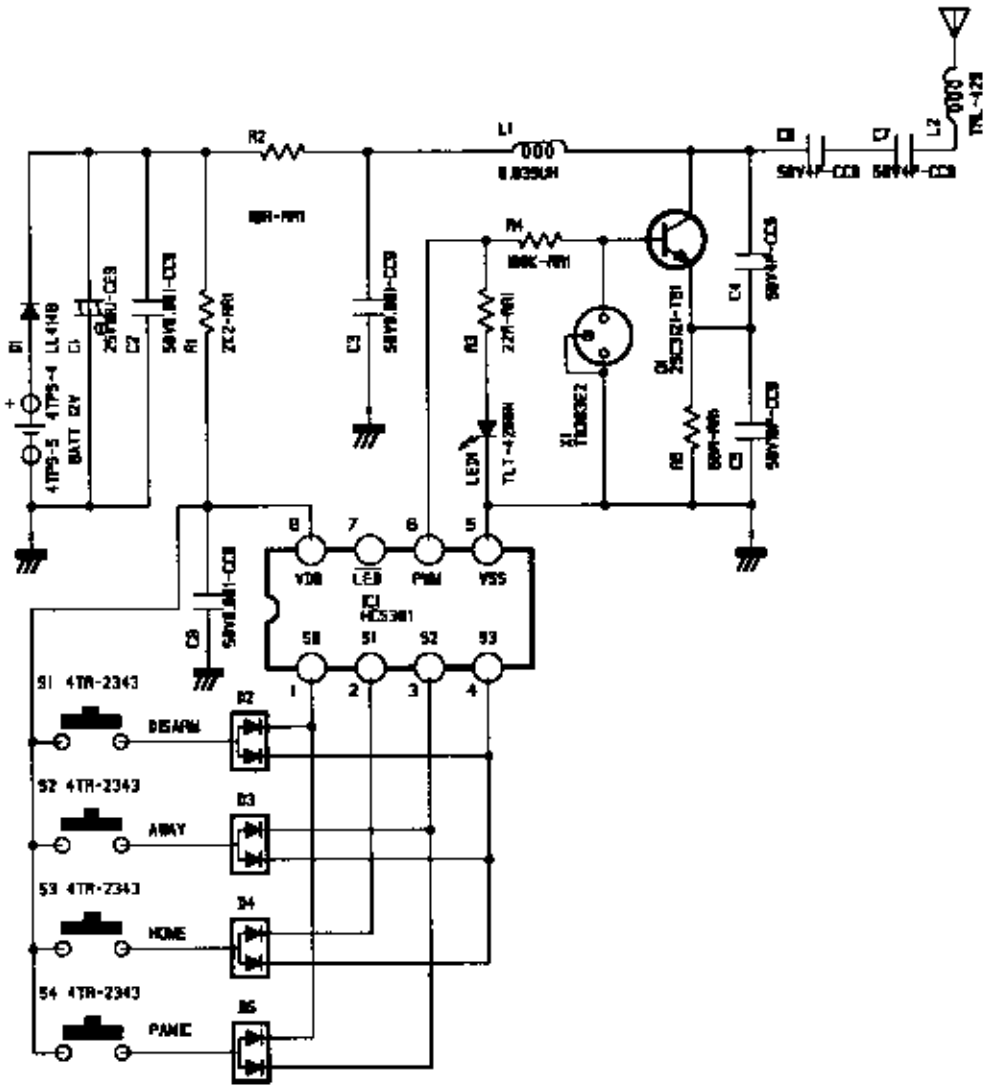

DATE	: 2000/10/10
RELEASE 1 :	
RELEASE 2 :	
RELEASE 3 :	
DRAW BY	: HRC
CHECK BY	:
MODEL: SR-119	
NUZON TECHNOLOGY INC.	