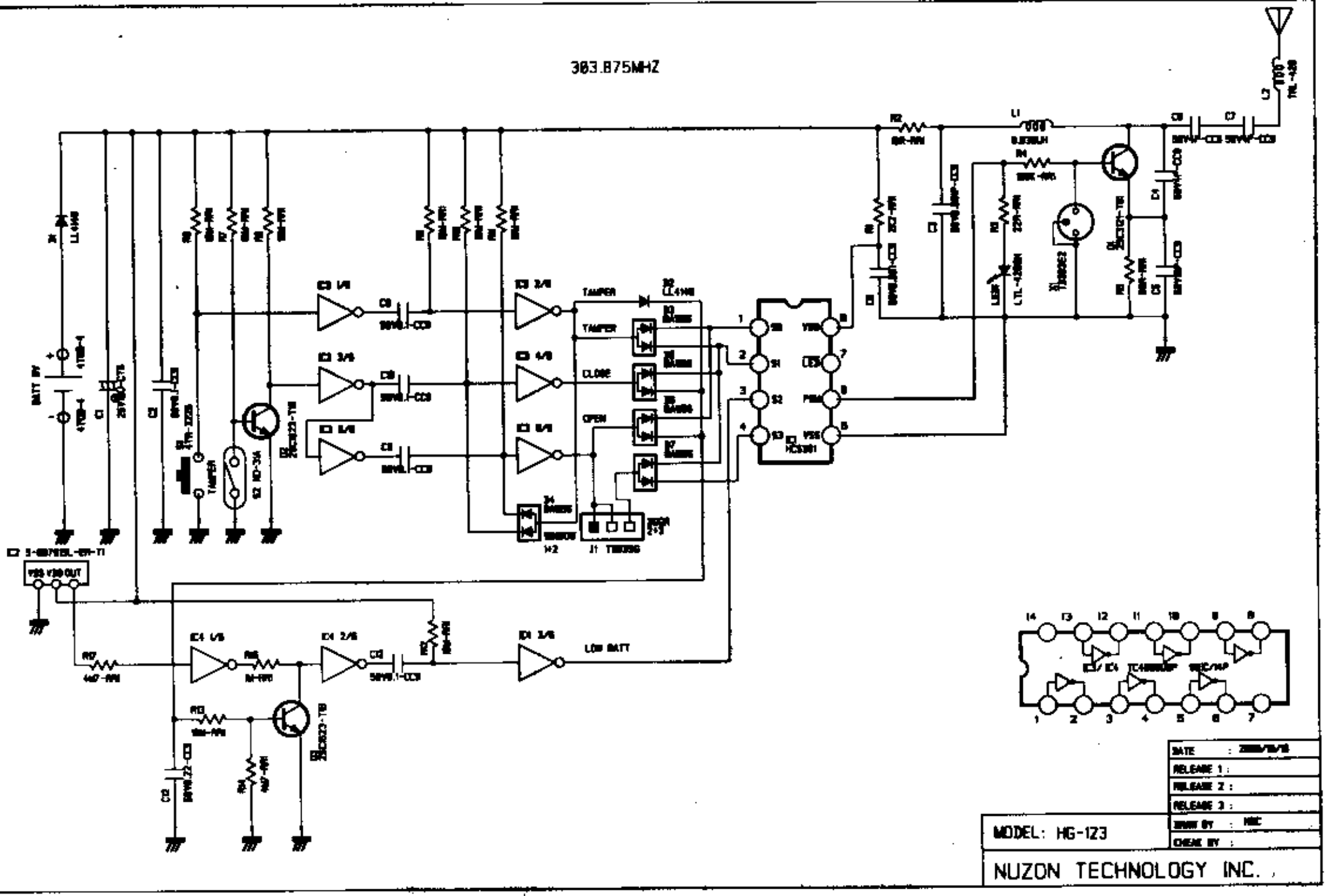
303.875MHZ
TAMPER
CLOSE
OPEN
LOW BATT
MODEL: HG-123
NUZON TECHNOLOGY INC.