Appendix 2 Block Diagram of Cassius
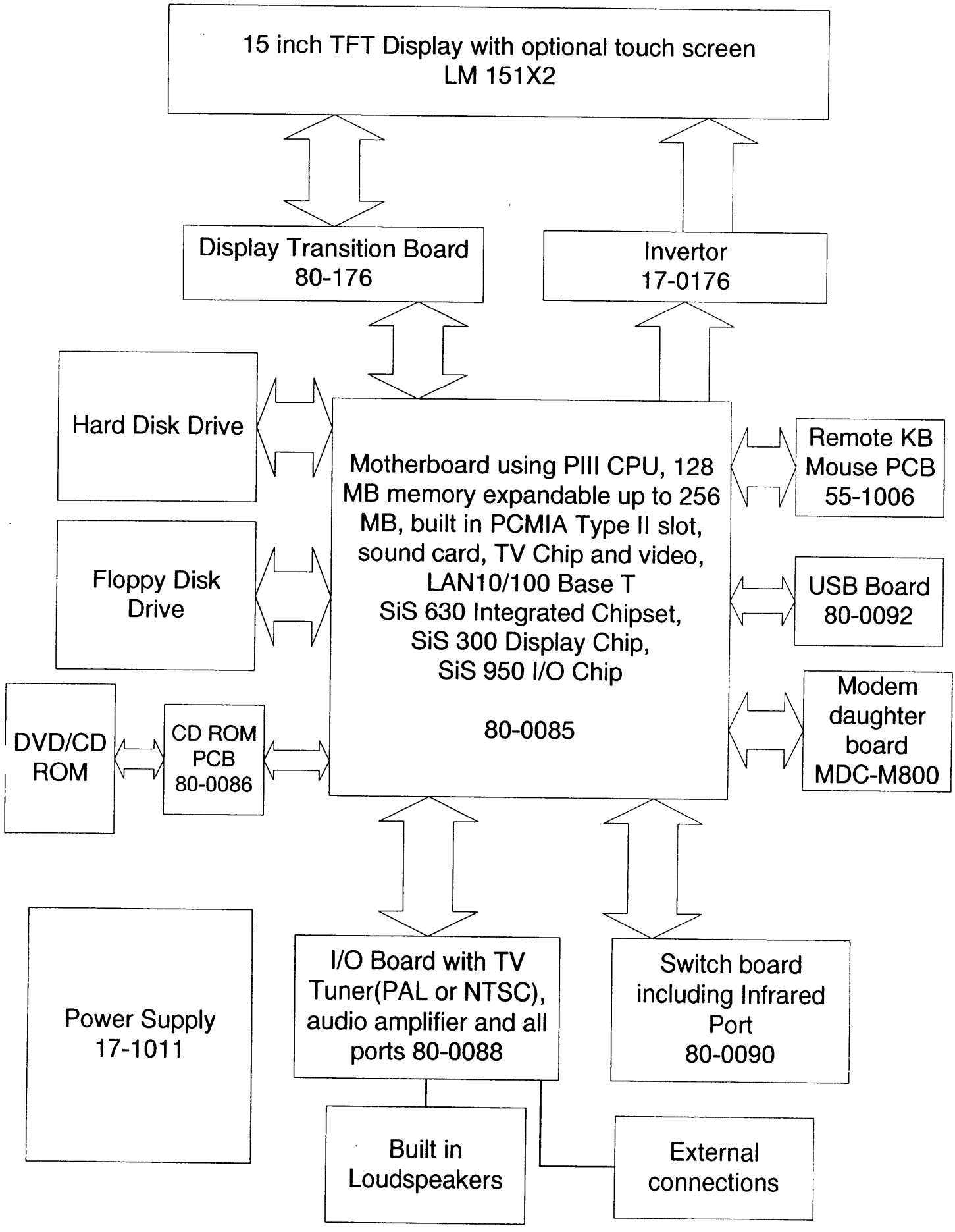
Block Diagram Of Cassius