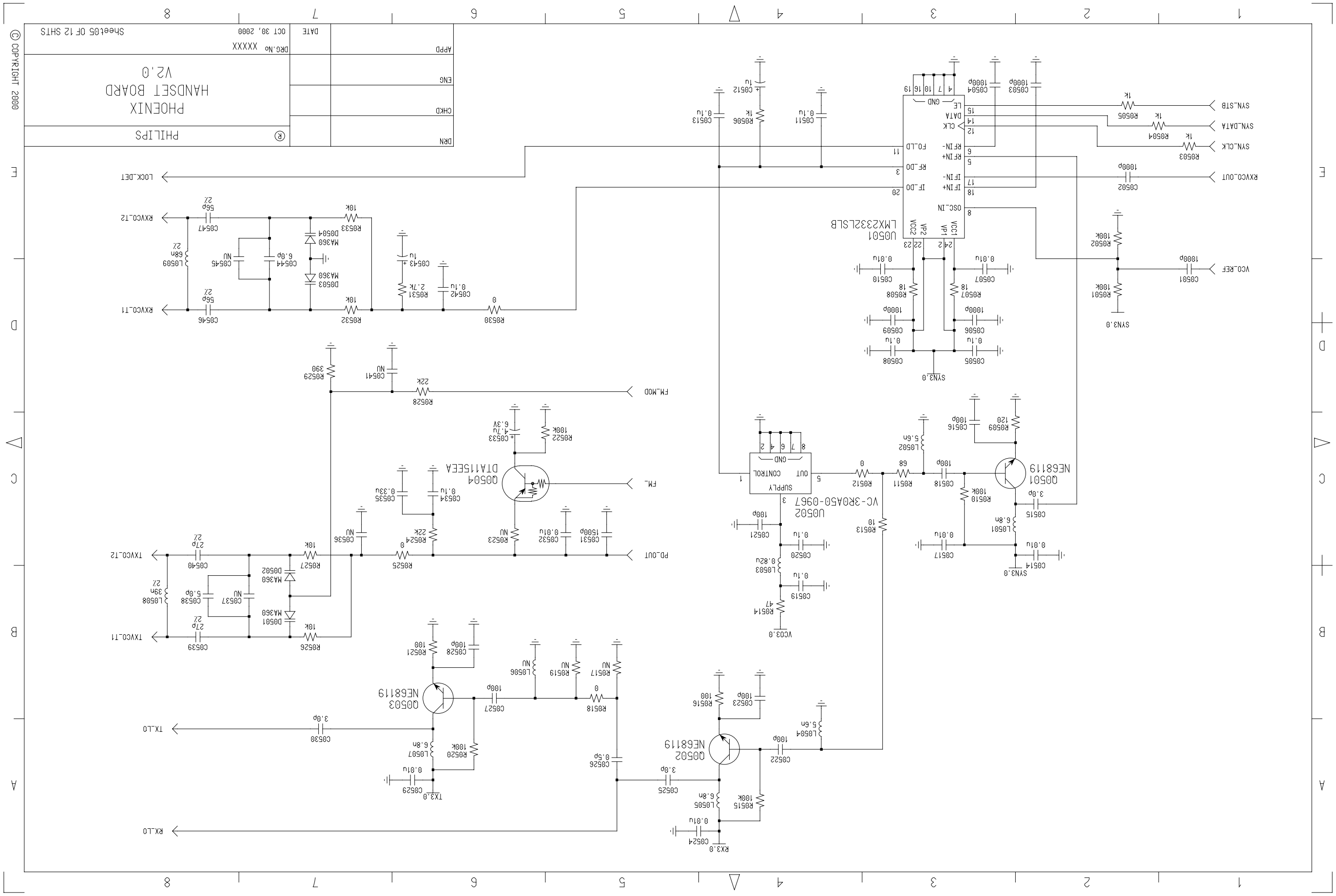
PHILIPS
PHOENIX
HANDSET BOARD
V2.0
DRN
CHKD
ENG
APPD
DRG.No XXXXX
OCT 30, 2000
DATE
Sheet05 OF 12 SHTS
© COPYRIGHT 2000
LOCK_DET
RXVCO_OUT
SYN_STB
SYN_DATA
SYN_CLK
VCO_REF
U0501
LMX2332LSLB
U0502
VC-3R0A50-0967
Q0501
NE68119
Q0502
NE68119
Q0503
NE68119
Q0504
DTA115EEA
FM_MOD
FM_
PD_OUT
TXVCO_T2
TXVCO_T1
TX_LO
RX_LO
RXVCO_T2
RXVCO_T1
SYN3.0
VCC3.0
RX3.0
TX3.0