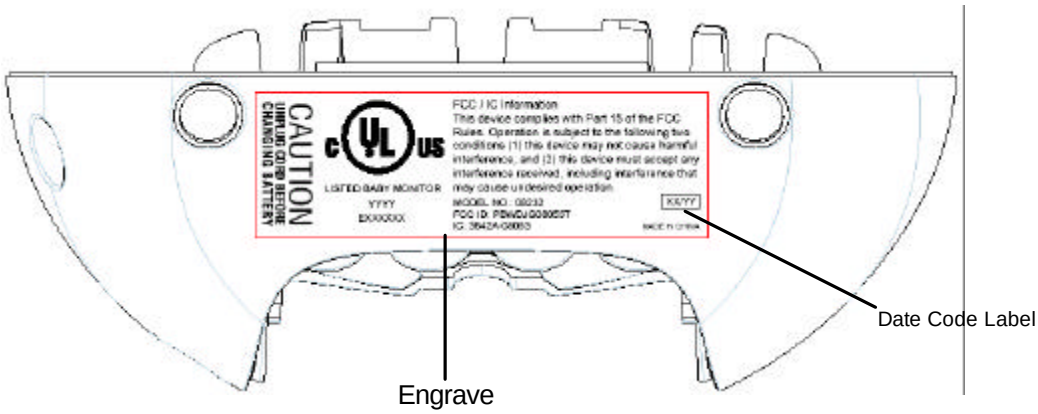

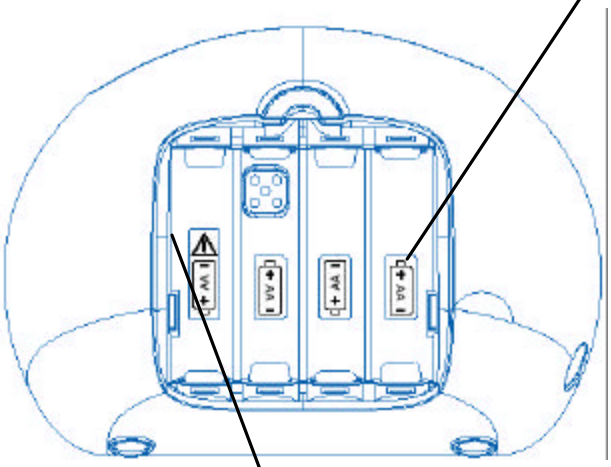

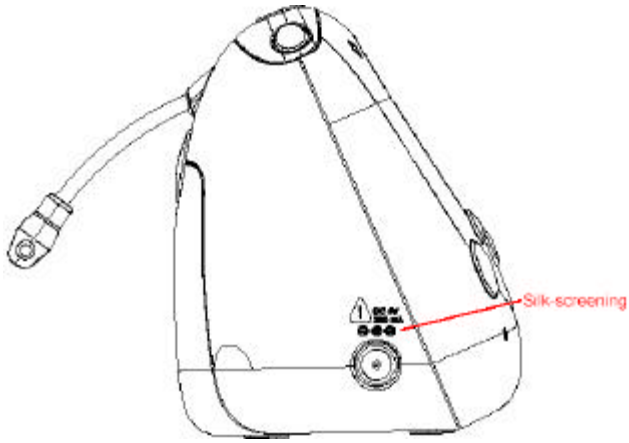

Serial number label on straight wall inside compartment

S/N Label 38 x 6.5 mm

Model Label

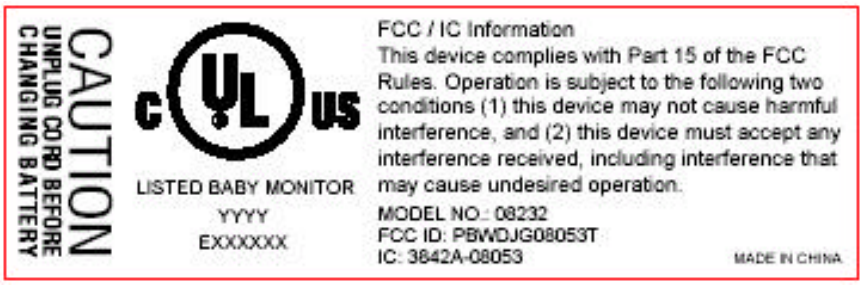

This document contains confidential and proprietary information of Ascalade. Its use is under the terms and conditions of Proprietary. Ascalade in this document means Ascalade Technologies Inc., Ascalade Communications Ltd., or Dongguan Ascalade Electronics Co. Ltd.