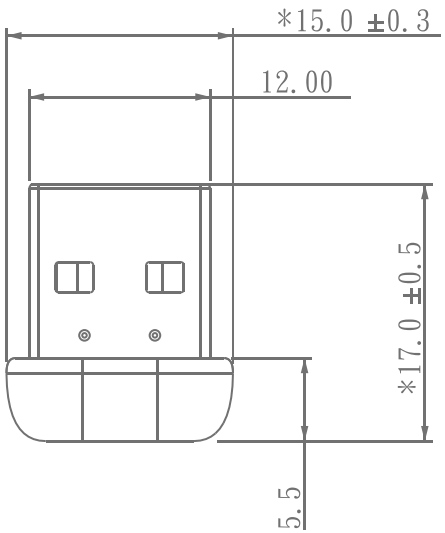
*15.0 ±0.3
12.00
*17.0 ±0.5
5.5

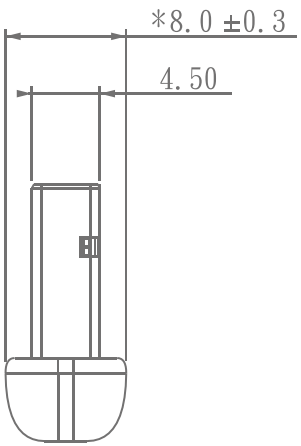
*8.0 ±0.3
4.50

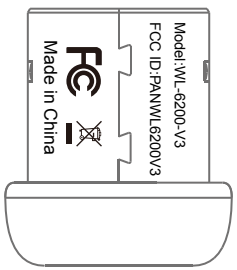
Model:WL-6200-V3
FCC ID:PANWL6200V3
Made in China

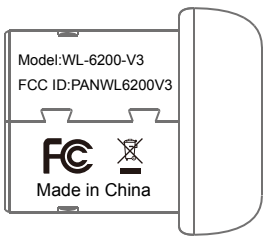
Model:WL-6200-V3
FCC ID:PANWL6200V3
Made in China