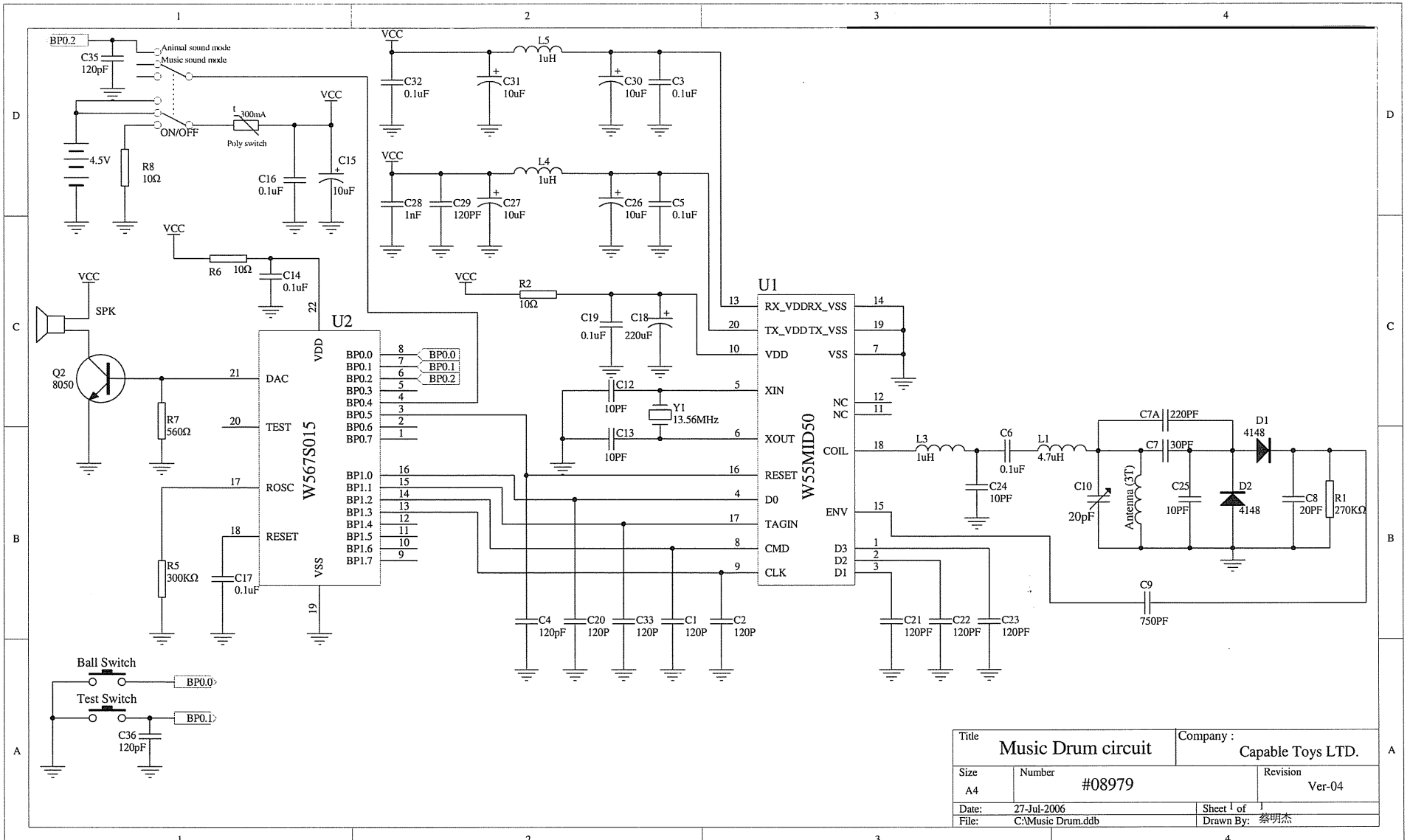

Title	Music Drum circuit	Company :	Capable Toys LTD.
Size	A4	Number	#08979
Revision	Ver-04		
Date:	27-Jul-2006	Sheet 1 of 1	
File:	C:\Music Drum.ddb	Drawn By:	蔡明杰