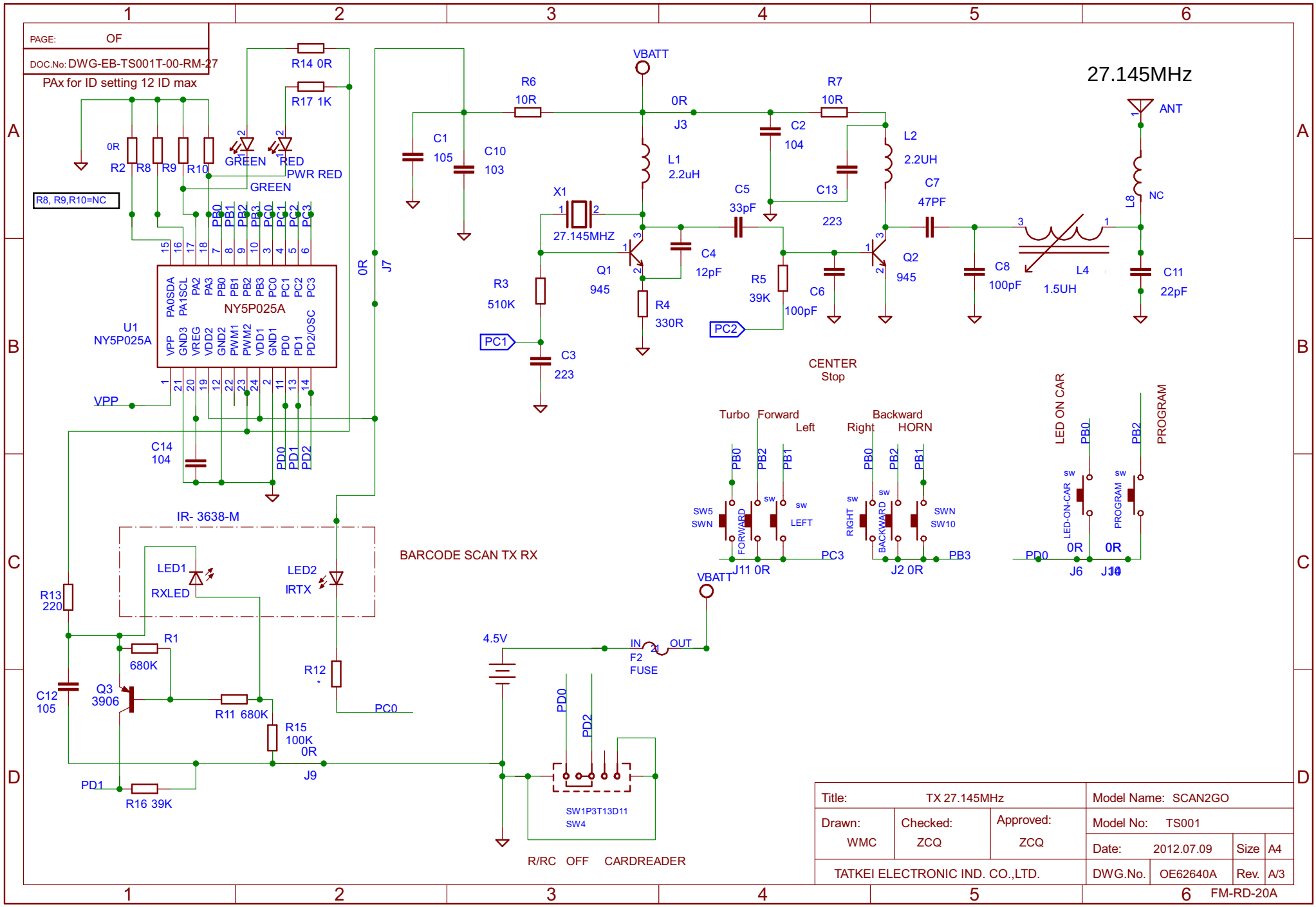

Title:	TX 27.145MHz		Model Name:	SCAN2GO	
Drawn: WMC	Checked: ZCQ	Approved: ZCQ	Model No:	TS001	
			Date: 2012.07.09	Size	A4
TATKEI ELECTRONIC IND. CO.,LTD.			DWG.No. OE62640A	Rev.	A/3

FM-RD-20A