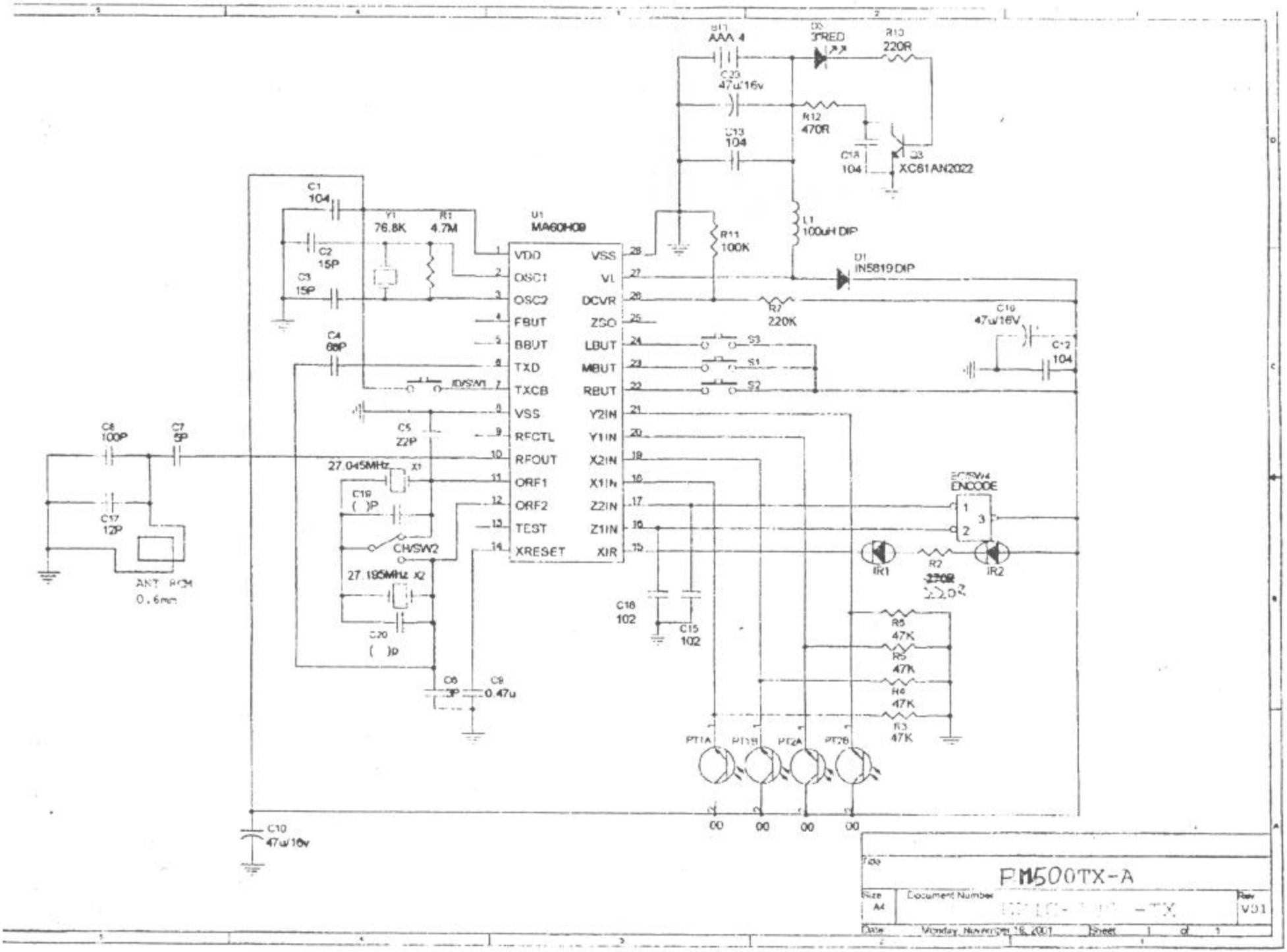
B17
AAA 4
C23
47u/16v
D2
3*RED
R10
220R
R12
470R
C13
104
C18
104
Q3
XC61AN2022
L1
100uH DIP
D1
IN5819 DIP
R11
100K
R7
220K
C1
104
C2
15P
C3
15P
Y1
76.8K
R1
4.7M
U1
MA60H09
VDD
OSC1
OSC2
FBUT
BBUT
TXD
TXCB
VSS
RFCTL
RFOUT
ORF1
ORF2
TEST
XRESET
VSS
VL
DCVR
ZSO
LBUT
MBUT
RBUT
Y2IN
Y1IN
X2IN
X1IN
Z2IN
Z1IN
XIR
S3
S1
S2
C4
68P
C5
22P
C8
100P
C7
5P
C17
12P
ANT RCM
0.6mm
27.045MHz
X1
C19
( )P
CHSW2
27.195MHz X2
C20
( )P
C6
3P
C9
0.47u
C10
47u/16v
C16
102
C15
102
C11
47u/16V
C12
104
ENCODE
IR1
R2
IR2
R8
47K
R5
47K
R4
47K
R3
47K
PT1A
PT1B
PT2A
PT2B
FM500TX-A
Size
A4
Document Number
Rev
V01
Date
Monday, November 18, 2001
Sheet
1
of
1