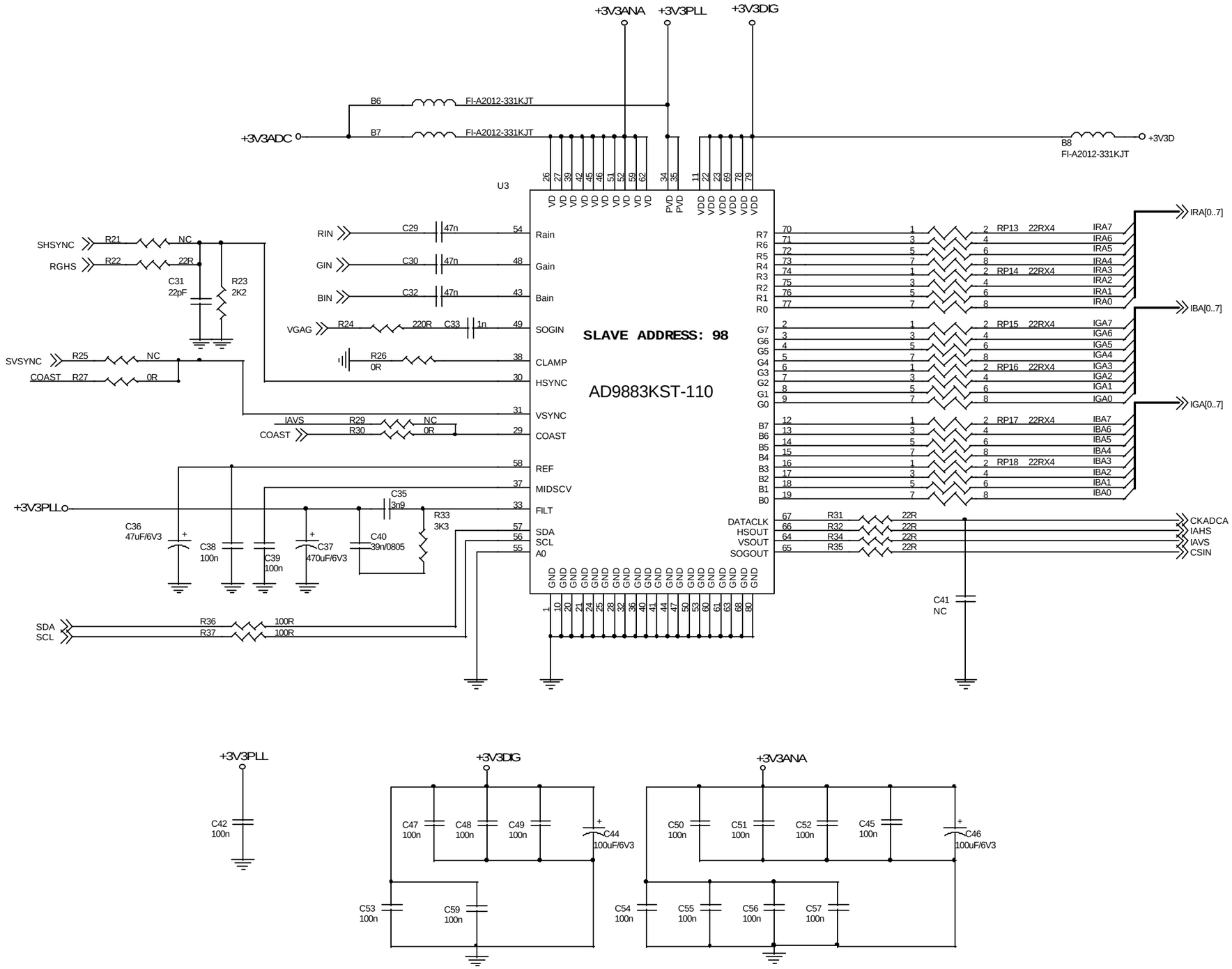

Title	FUSIONTECTRONICS.CO.,LTD	
Size A3	Document Number AD9883-110	Rev 0902
Date: Thursday, September 05, 2002	Sheet 2 of 7	