REVISIONS			
ZONE	REV	DESCRIPTION	DATE
--	1	PRE-RELEASE	05.06.03
--	A	RELEASE TO PRODUCTION	05.12.03

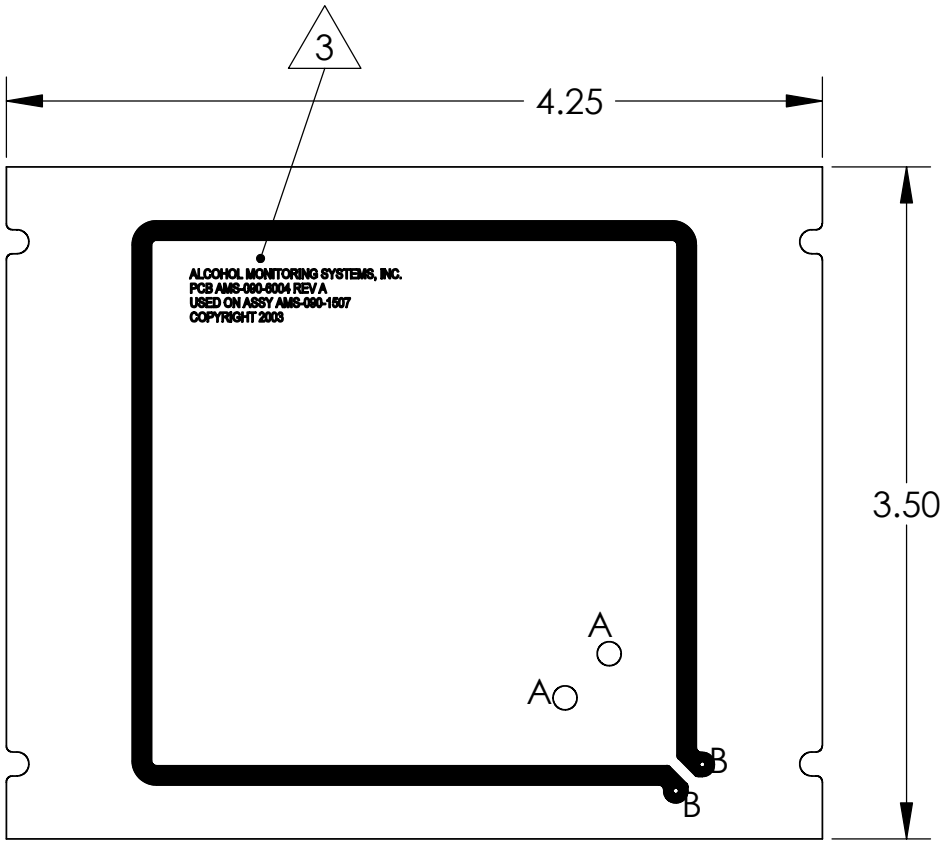

METAL LAYER SHOWN

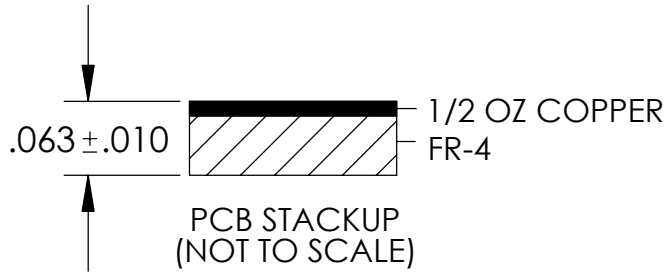

PCB STACKUP
(NOT TO SCALE)

HOLE	QTY	SIZE	
A	2	∅.125	NON-PLATED
B	2	∅.031	NON-PLATED

NOTES:
1. ABOVE DRAWING FOR REFERENCE ONLY.
2. ACTUAL GEOMETRY AND DIMENSIONS PROVIDED IN FILE AMS-090-6004A.DXF
3. TEXT CAN BE PART OF METAL LAYER OR SCREENED ON. MANUFACTURER'S OPTION.

ITEM	QTY	UOM	AMS PART NUMBER	DESCRIPTION	REV

UNLESS OTHERWISE SPECIFIED, DIMENSIONS ARE IN INCHES AND TOLERANCES ARE AS FOLLOWS:
FRACTIONAL: ± XX/XX .X ± X.XXX
ANGULAR MACH: ± X.X° .XX ± 0.020
BEND: ± X.X° .XXX ± X.005

Alcohol Monitoring Systems, LLC
9135 South Ridgeline Boulvard
Highlands Ranch, Colorado 80129
Phone: (303)989-8900 Fax: (303)791-4262

FILENAME: AMS-090-6004A.SLDDRW

PCB, MODEM ANTENNA

MATERIAL	DRAWN	DATE
--	M WOJCIK	05.06.03
FINISH --	CHECKED	DATE
DO NOT SCALE DRAWING THIRD ANGLE PROJECTION	APPROVED	DATE

SIZE A | DWG. NO. AMS-090-6004 | REV. A
SCALE: 1:1 | SHEET: 1 OF 1

PROPRIETARY AND CONFIDENTIAL
THE INFORMATION CONTAINED IN THIS DRAWING IS THE SOLE PROPERTY OF ALCOHOL MONITORING SYSTEMS, LLC. ANY REPRODUCTION IN PART OR AS A WHOLE WITHOUT THE WRITTEN PERMISSION OF ALCOHOL MONITORING SYSTEMS, LLC IS PROHIBITED.