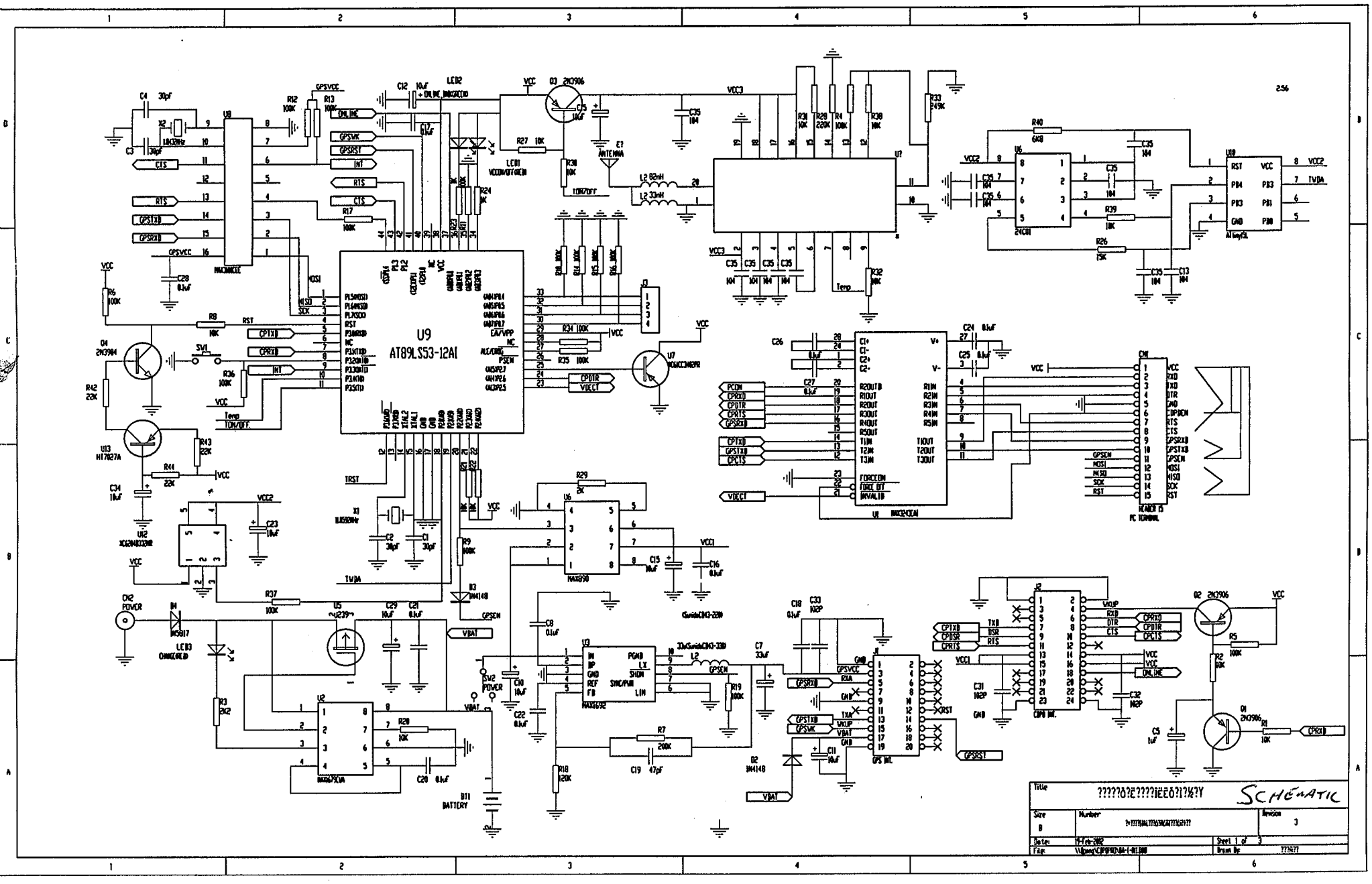
U9
AT89LS53-12AI
MAX3232CEAI
MAX3890
MAX1692
MAX6750A
MAX3223CAI
MAX3223CAI
MAX3223CAI

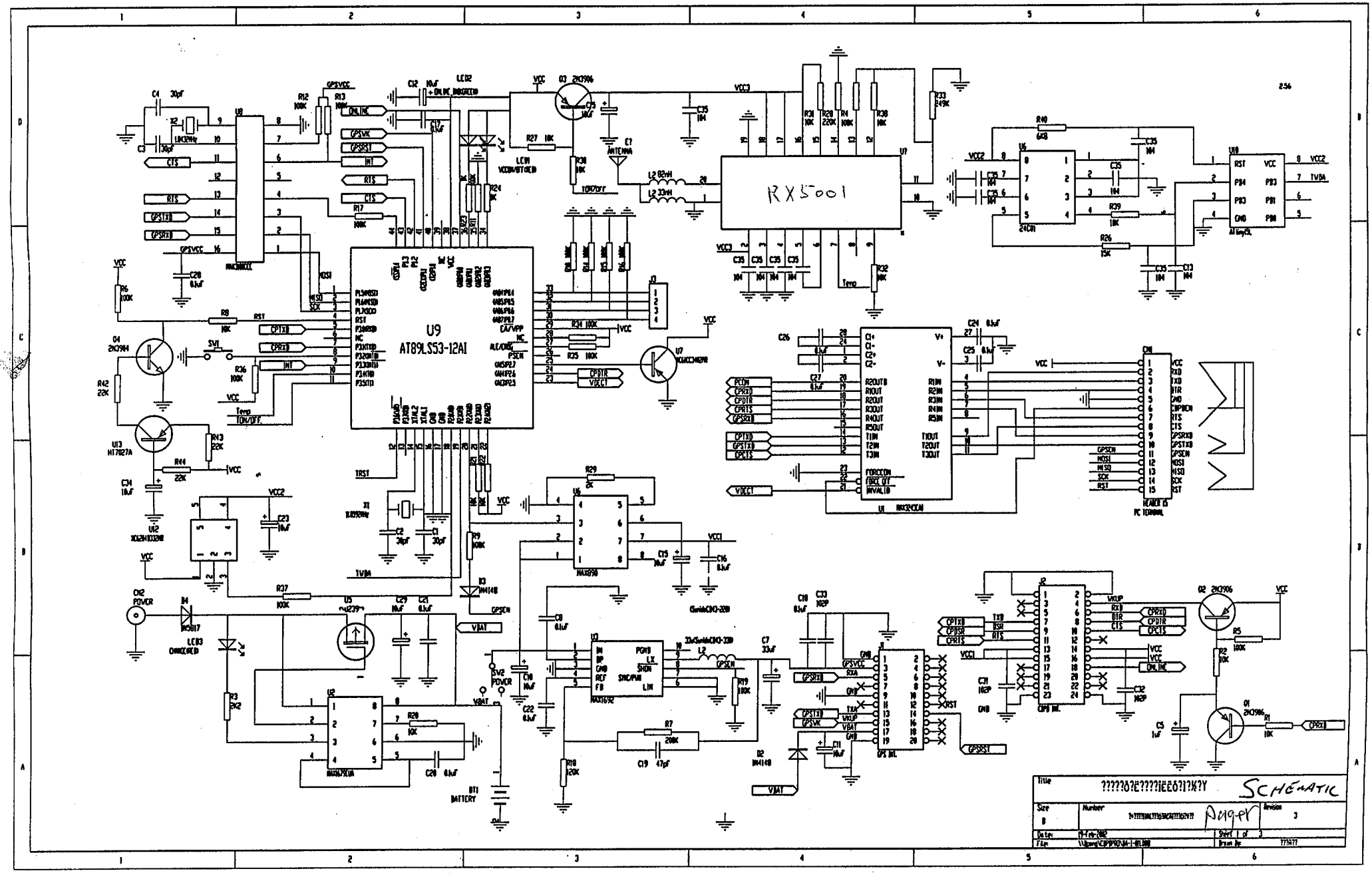
U9
AT89LS53-12AI
RX5001
U7
U8
MAX3000
U6
24C01
U10
U1
MAX232CSN
CN1
HEADER 15
PC TERMINAL
U5
MAX890
U3
MAX1692
U2
MAX6250A
U4
MAX890
J2
CPU INT.
GPS INT.
CN2
POWER
BT1
BATTERY
Q1
2N3906
Q2
2N3906
Q3
2N3906
Q4
2N3904
U13
H17027A
U12
U11
Title
SCHEMATIC
Size
B
Number
Revision
3
Date:
Sheet 1 of 3
File:
Drawn by: