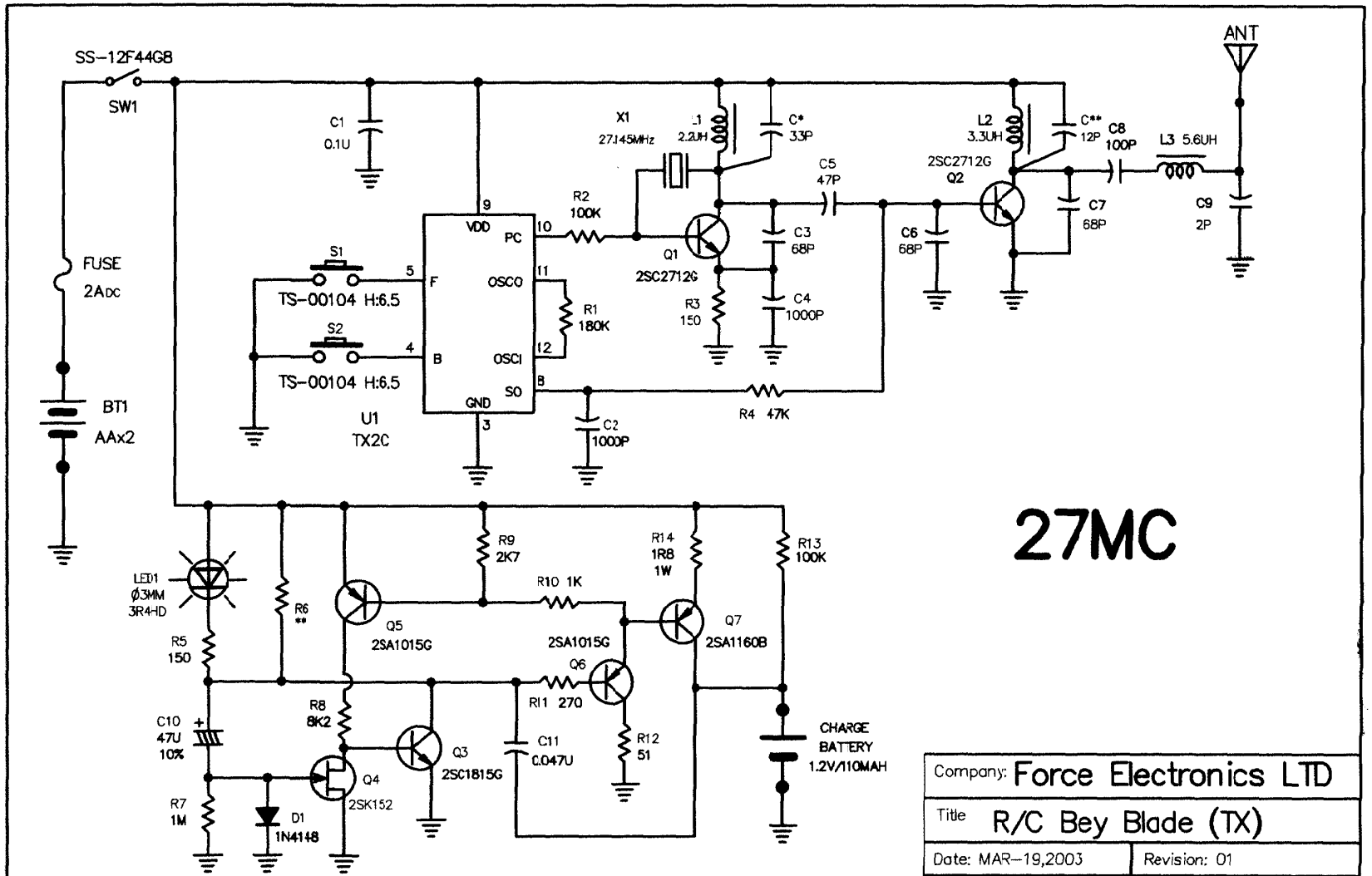
SS-12F44G8
SW1
FUSE
2ADC
BT1
AAx2
C1
0.1U
X1
27.145MHz
L1
2.2UH
C*
33P
L2
3.3UH
C**
12P
C8
100P
L3 5.6UH
ANT
C5
47P
2SC2712G
Q2
C7
68P
C9
2P
C6
68P
R2
100K
Q1
2SC2712G
C3
68P
C4
1000P
R3
150
S1
TS-00104 H:6.5
S2
TS-00104 H:6.5
VDD
PC
F
OSCO
B
OSCI
SO
GND
U1
TX2C
R1
180K
C2
1000P
R4 47K
LED1
Ø3MM
3R4HD
R5
150
R6
**
R9
2K7
R10 1K
R14
1R8
1W
R13
100K
Q5
2SA1015G
2SA1015G
Q6
Q7
2SA1160B
R11 270
R8
8K2
C10
47U
10%
Q3
2SC1815G
C11
0.047U
R12
51
Q4
2SK152
R7
1M
D1
1N4148
CHARGE
BATTERY
1.2V/110MAH
27MC
Company: Force Electronics LTD
Title R/C Bey Blade (TX)
Date: MAR-19,2003
Revision: 01
File: TX.27MC(FOR USA).SCH
Drawn By: CHEN XIN
MAR-19.03