Block Diagram
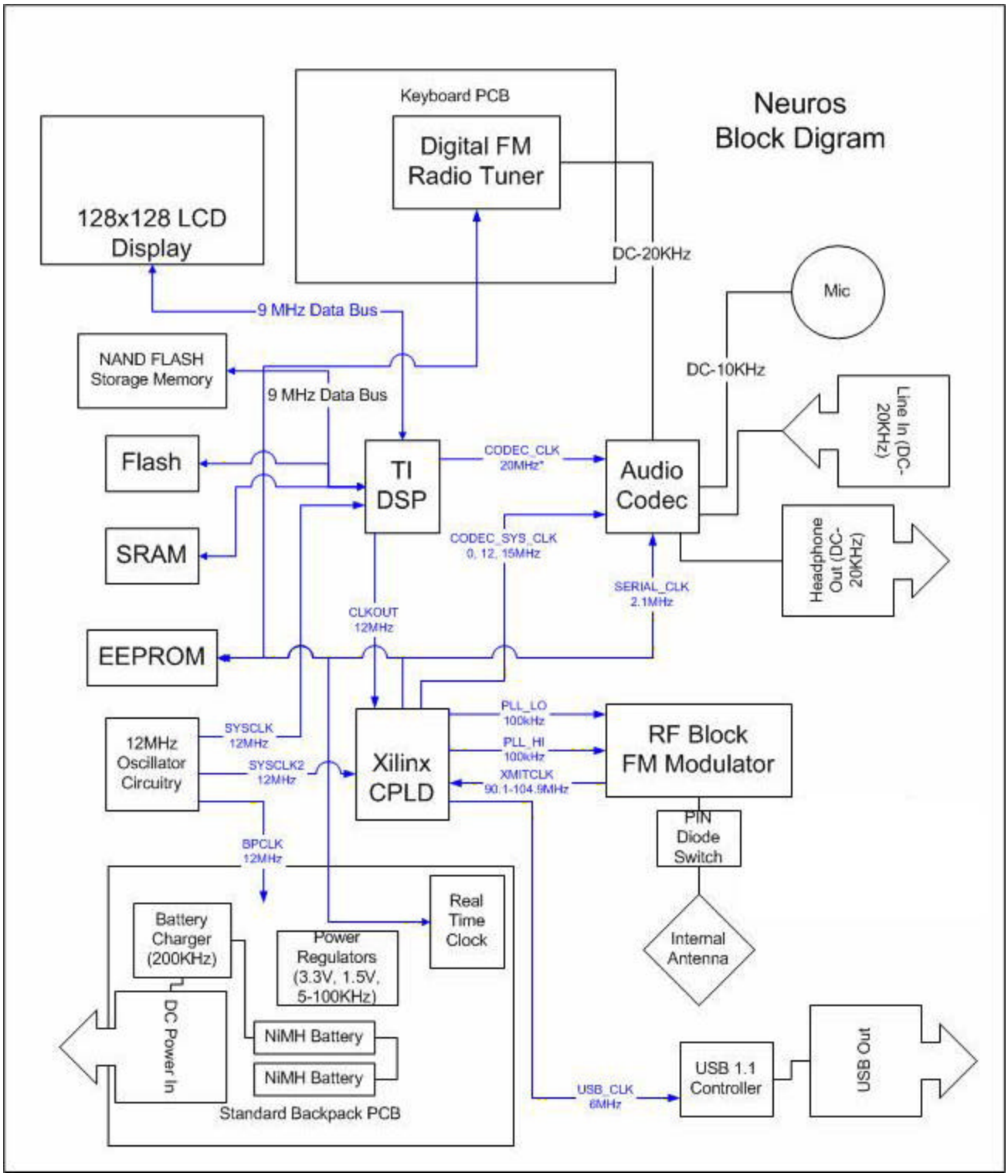
Equipment Tested (Company, Model)	*FCC ID:*
Digital Innovations	**PL7-11774**