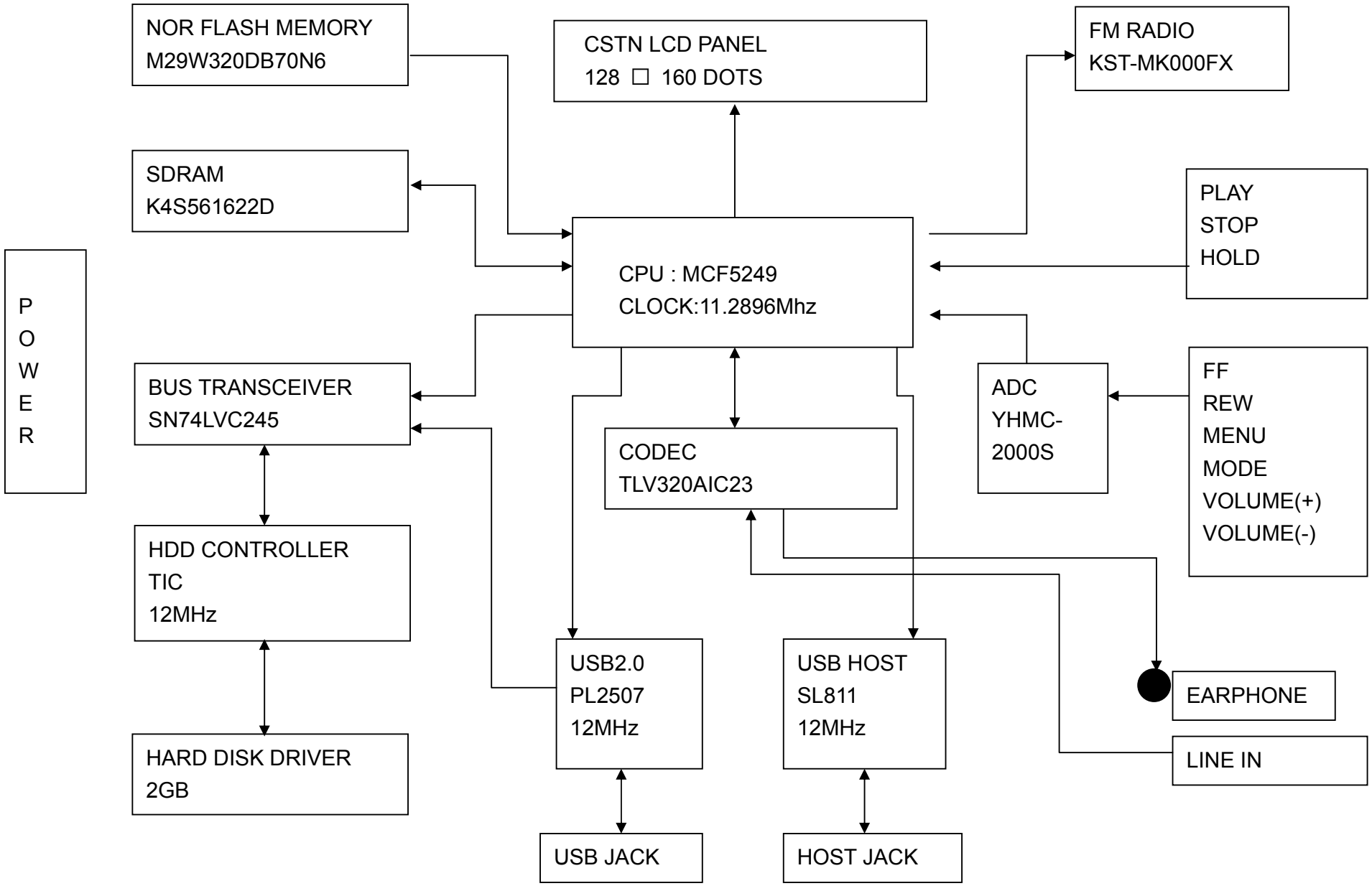DHD-1000 BLOCK DIAGRAM