PDF created with pdfFactory Pro trial version www.pdffactory.com

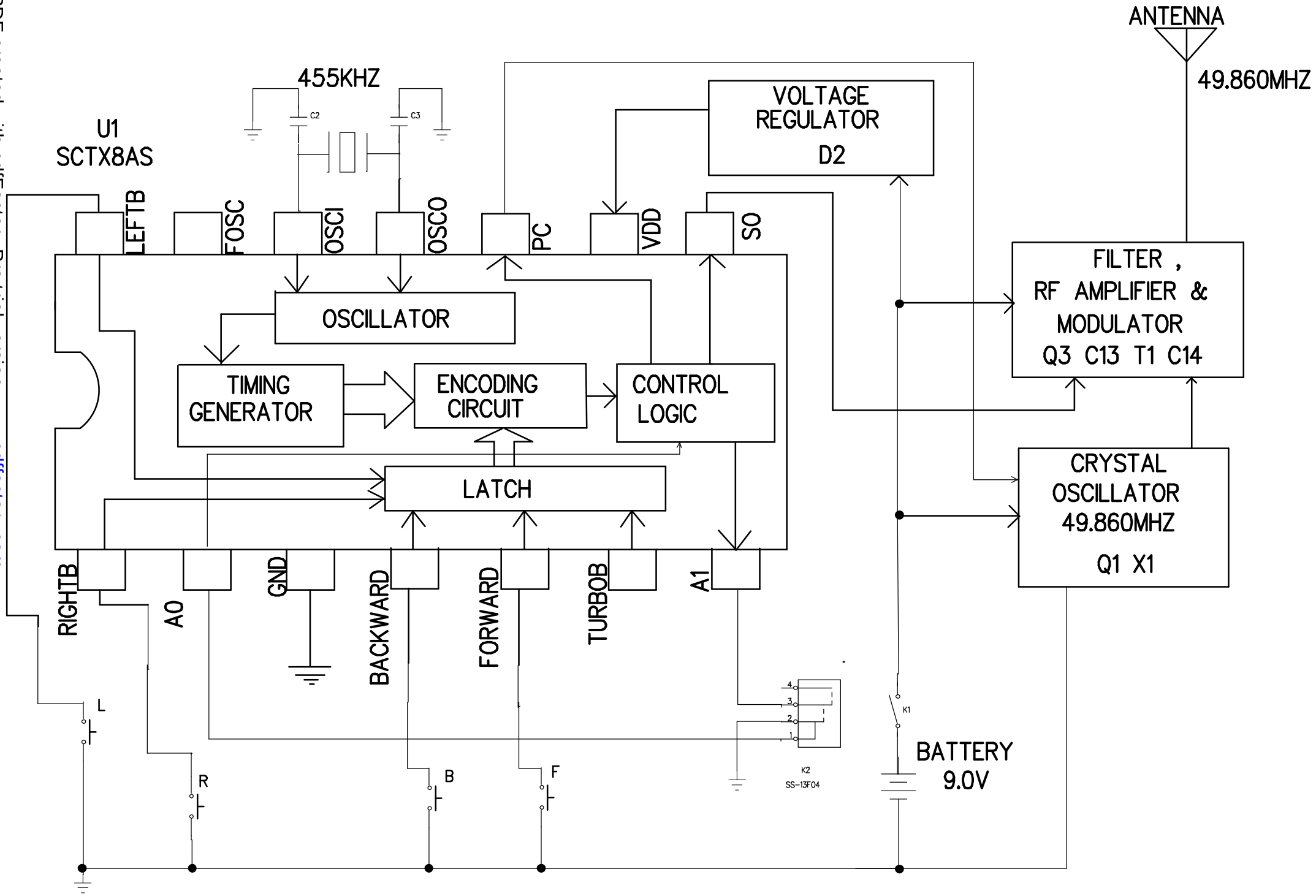

LUNG CHEONG	TITLE:	H276 49TX	DESIGN BY:	DRAWING BY:	APPROVED BY:	SHEET:
	FUNCTION:		FX ZENG			1 of 1
	DWG NO:		Aug-3-2007			