PDF created with pdfFactory Pro trial version www.pdffactory.com

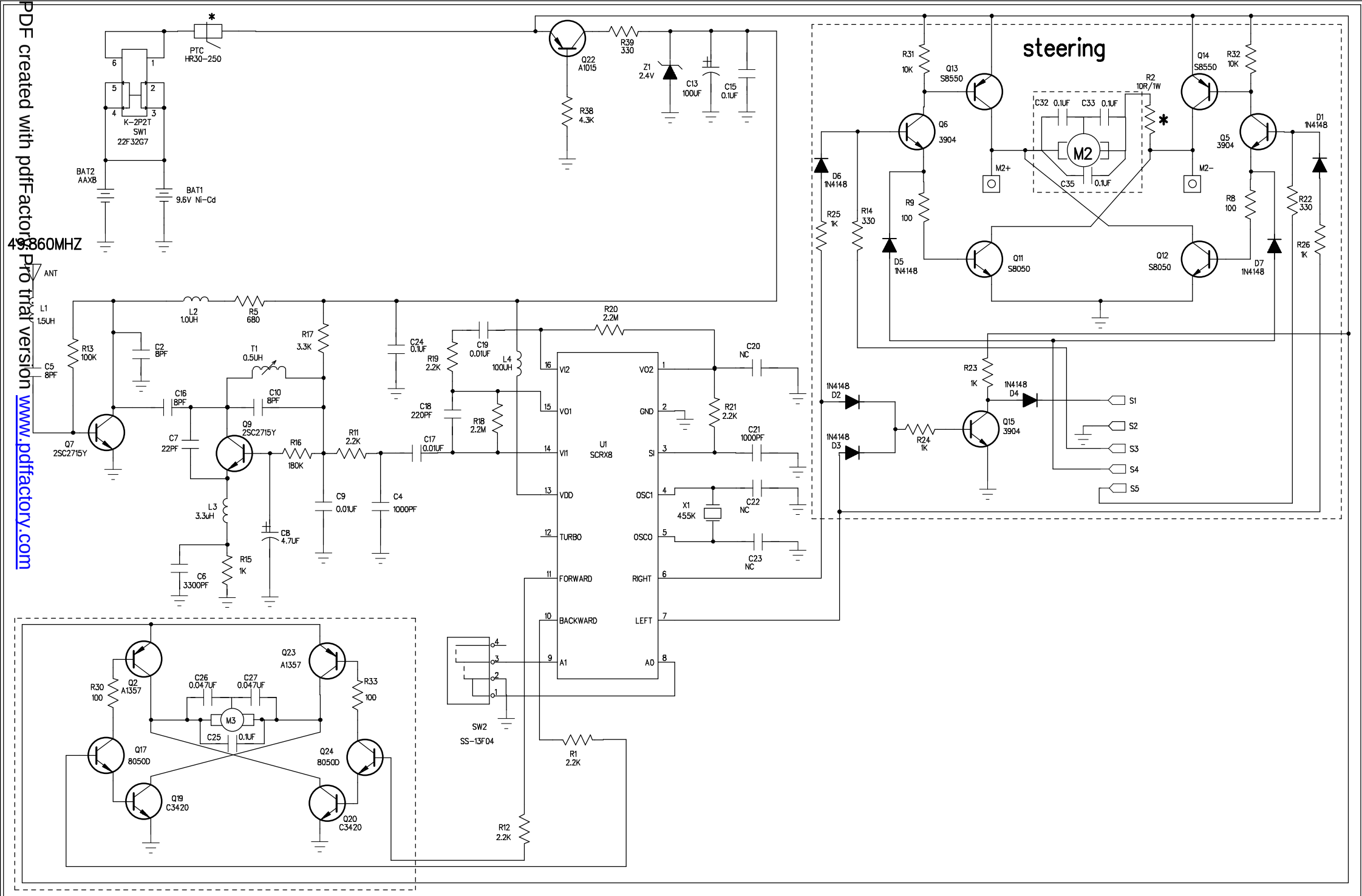

LUNG CHEONG	TITLE:	H276 49RX(Radio Shack:60-260-49MHZ)	DESIGN BY:	DRAWING BY:	APPROVED BY:	SHEET:
	option:		F.X ZENG	F.X.ZENG		1 of 1
			JUNE-22-2007	JUNE-22-2007		