MODIFY RECORD			
REV:	DESCRIPTION	APPROVED:	DATED:

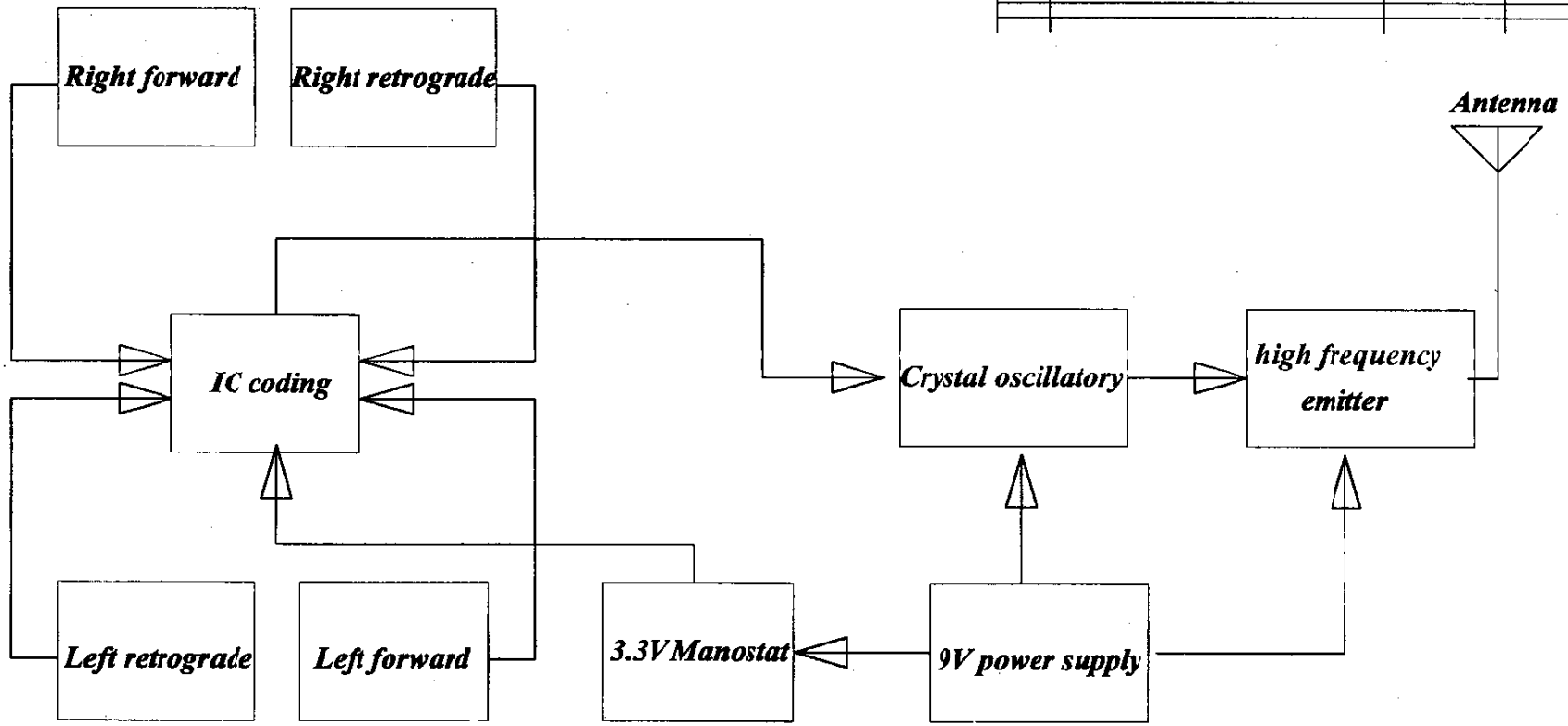

COMPANY:	LUNG CHEONG TOYS LIMITED		
TITLE:	4402 TX DIAGRAM		
FILE NAME:	K:JANGTU.SCH		
MODEL: 4402		DRAWING NO. :	
DRAWN: M.Y. DING DATED: OCT 15,2002		CHECKED: D-:TED:	APPROVED: DATED:
SHEET: 1 OF 1		SIZE: A4	REV: 1.0