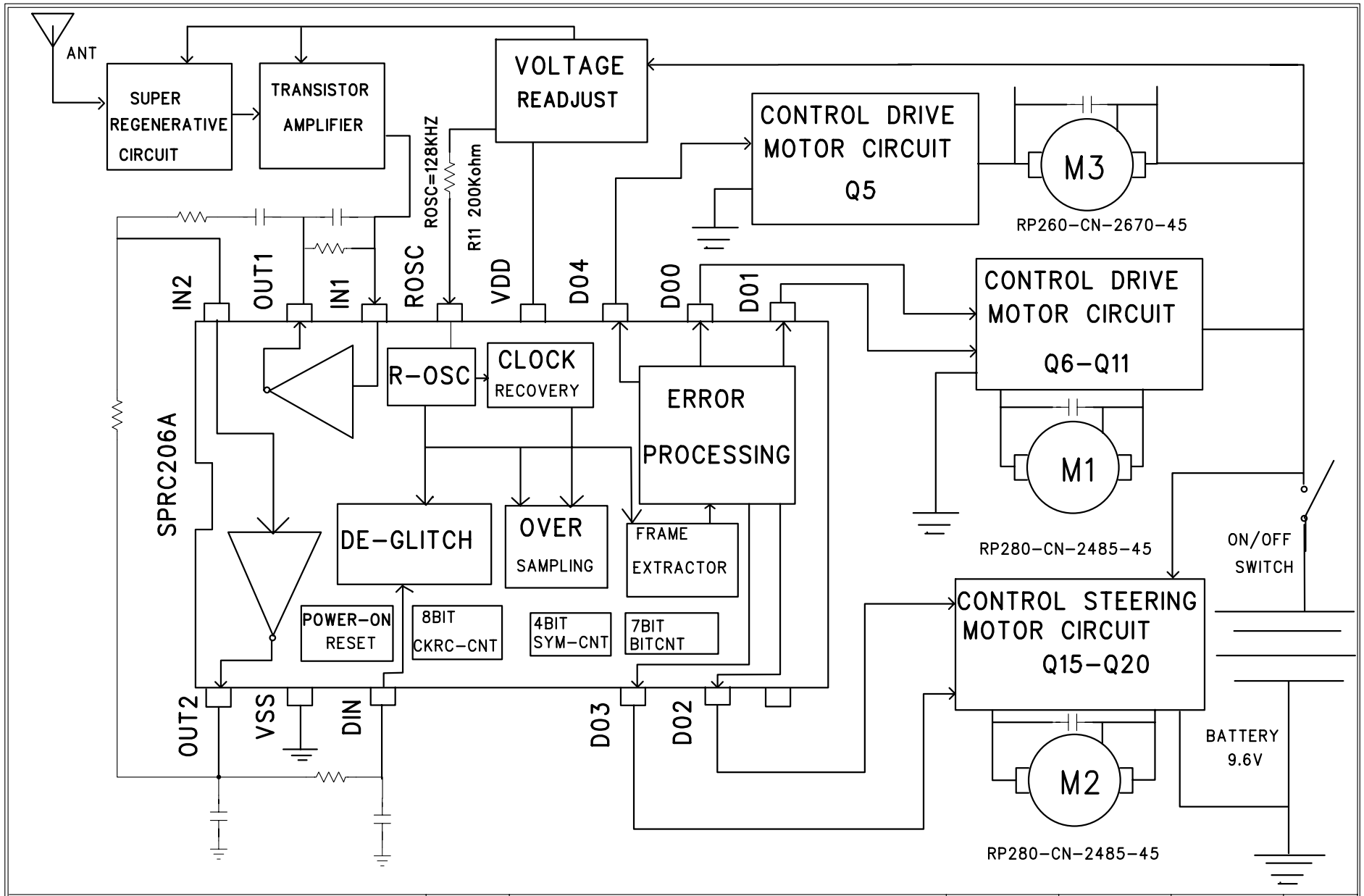

LUNG CHEONG	TITLE:	E047-RX 604397	DESIGN BY:	DRAWING BY:	APPROVED BY:	SHEET:
	FUNCTION:	RECEIVER		Liu Ji Hong		1 of 1
	DWG NO:	DZ02-00E047-01		19-05-2004		