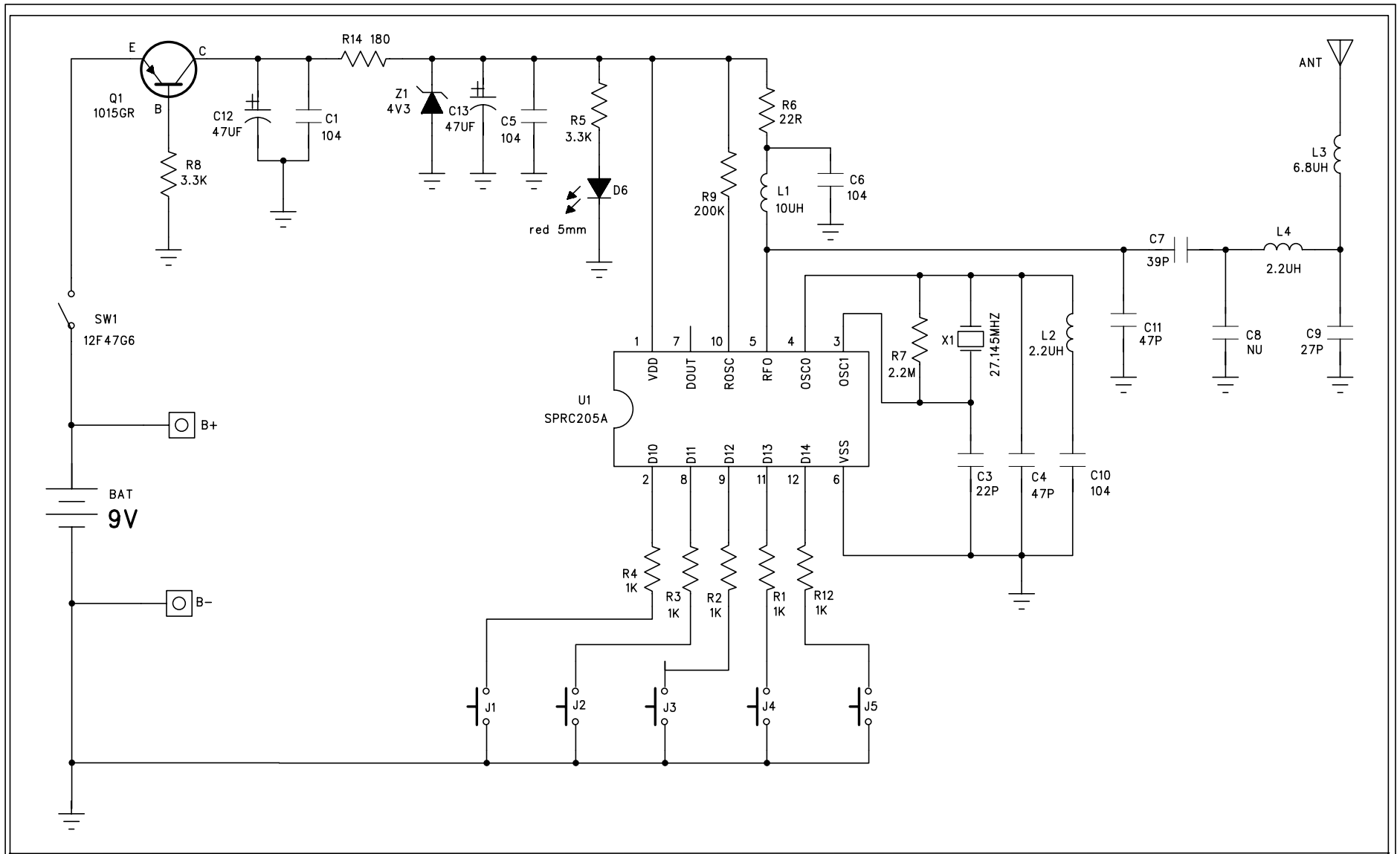

	TITLE:	E047 TX 27MHZ	DESIGN BY:	DRAWING BY:	APPROVED BY:	SHEET:
LUNG CHEONG	FUNCTION:			SHI QING WANG		1 of 1
	DWG NO:	DZ01-00E047-01		08-14-2003		