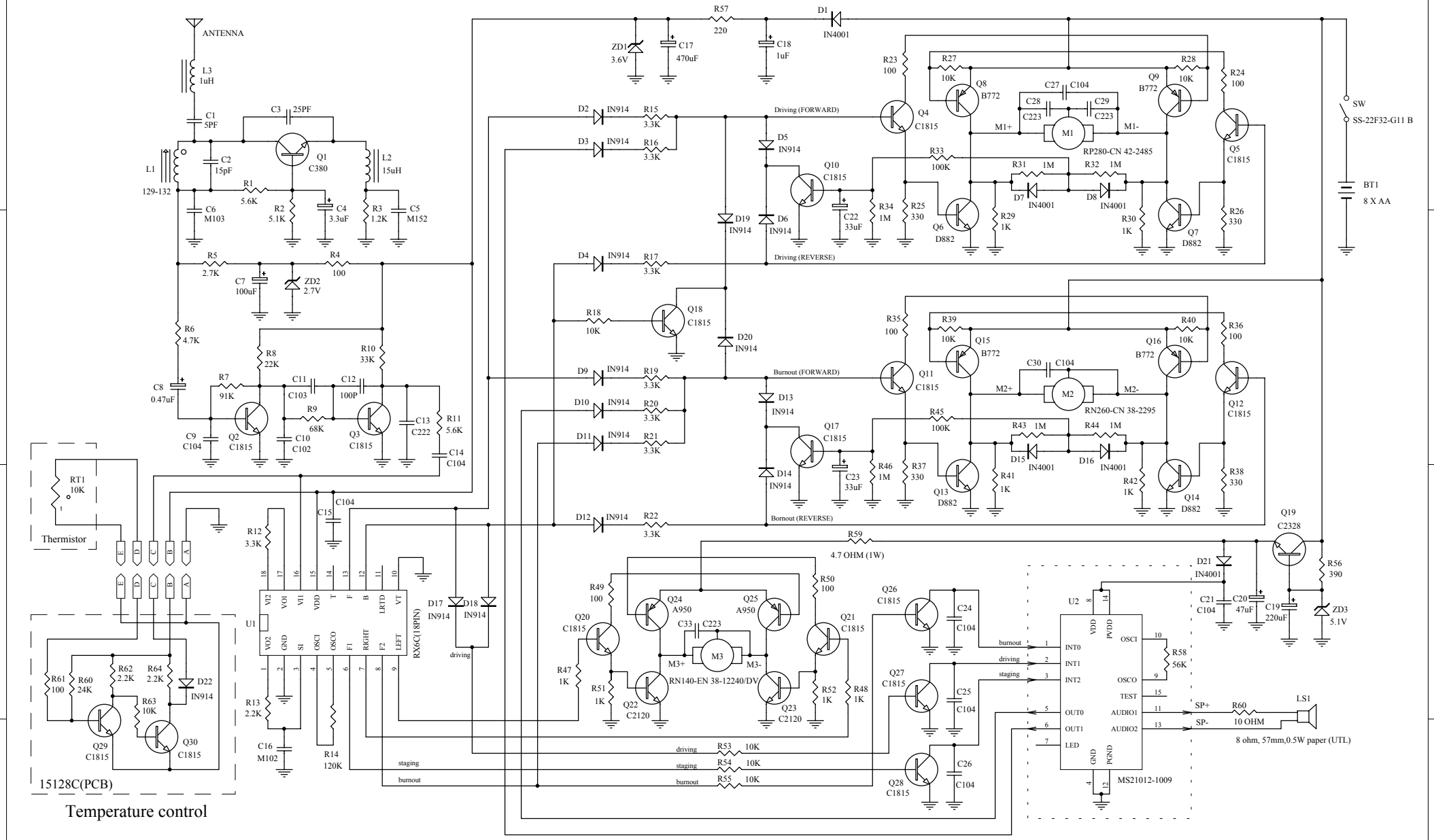

HERALD METAL & PLASTIC WORKS LTD.
K'NEX #15128 (49MHZ) RECEIVER CIRCUIT DIAGRAM

HERALD METAL & PLASTIC WORKS LTD. 興利五金塑膠廠		
Title: **K'NEX Burnout R/C CAR (RECEIVER)**		
Size: C	Number: **15128R (49MHZ)**	Revision: **3**
Date: 19-Apr-2002	Sheet of	
File: D:\lam1\Knex-01\15128-Burnout-49MHZ.dd	Drawn By: C.W.LAM (林志雲)	