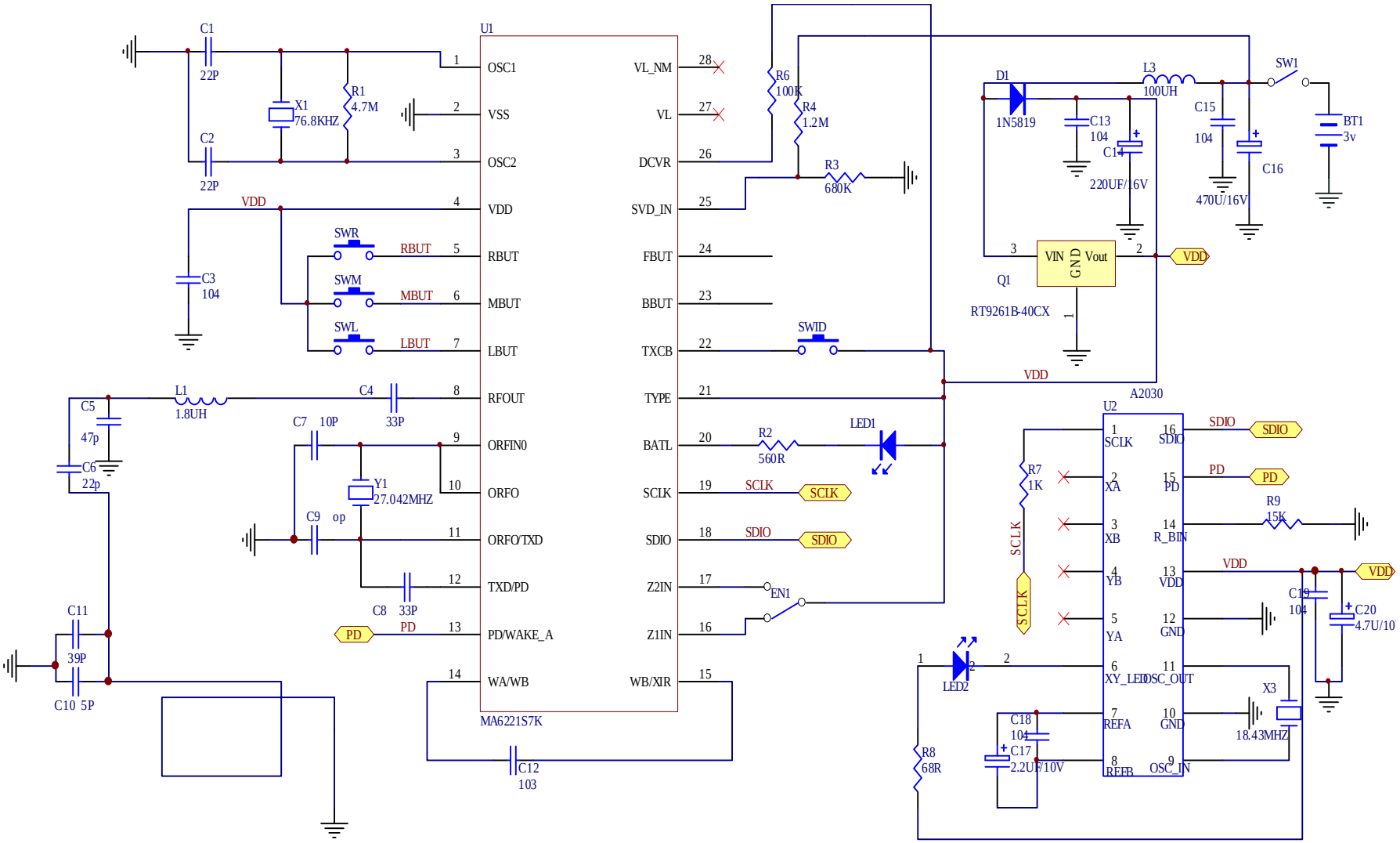

NORCHGATE-MOUSE-TR

HY5030

REV:B0
1
LIRENHUA