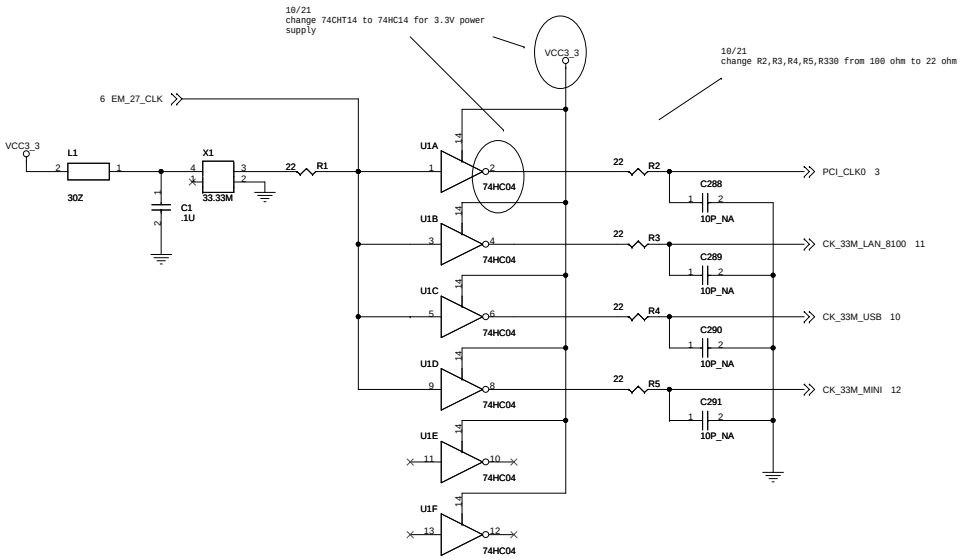

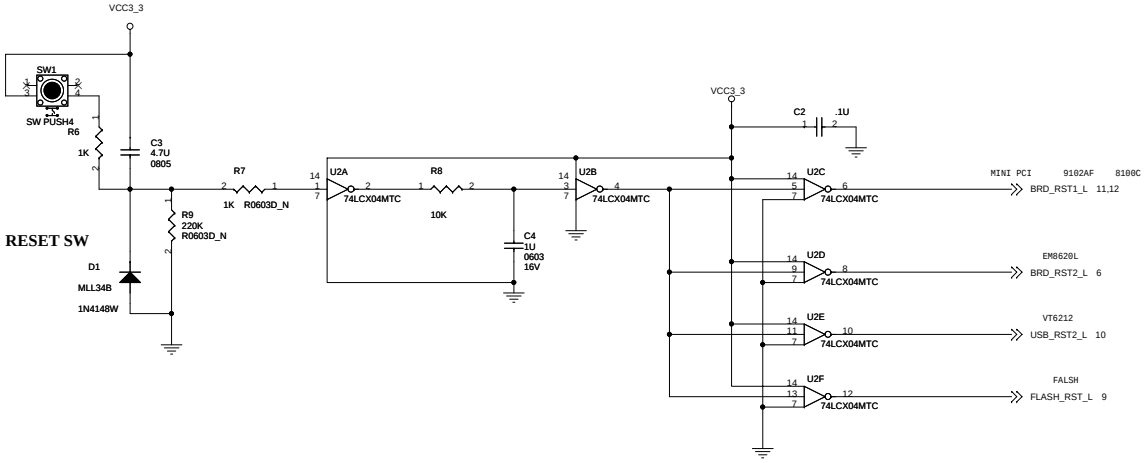

MiTAC International Corp.

Title: 02-RESET & CLOCK LOGIC

Size	Document Number	Rev
C	Advanced DMA (D117)	R0F

Date: Friday, November 04, 2005 Sheet 2 of 21

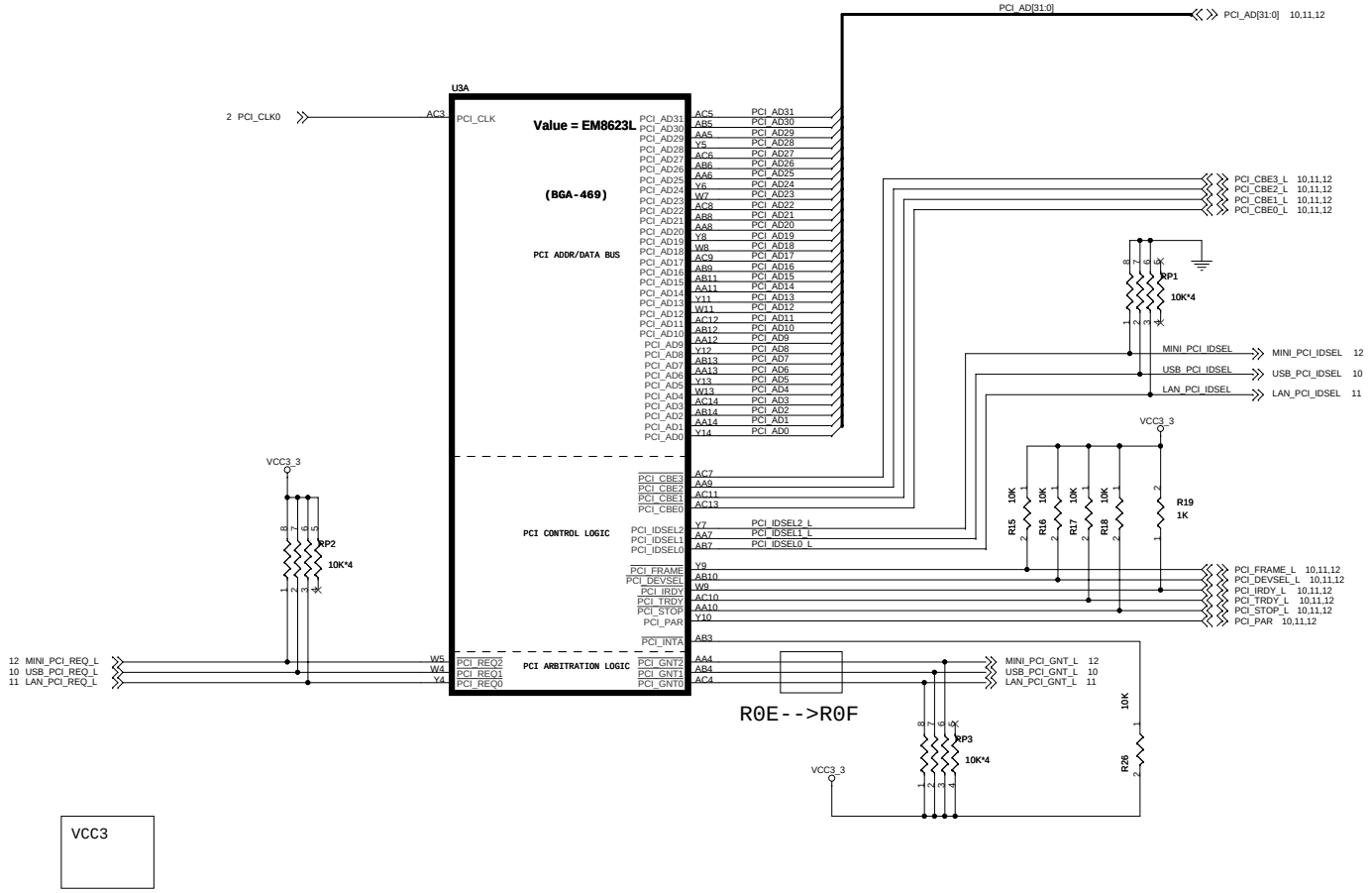

MiTAC International Corp.

Title		
03-EM8623L_PCI I/F		
Size C	Document Number Advanced DMA (D117)	Rev R0F
Date: Tuesday, March 20, 2007	Sheet 3 of 21	

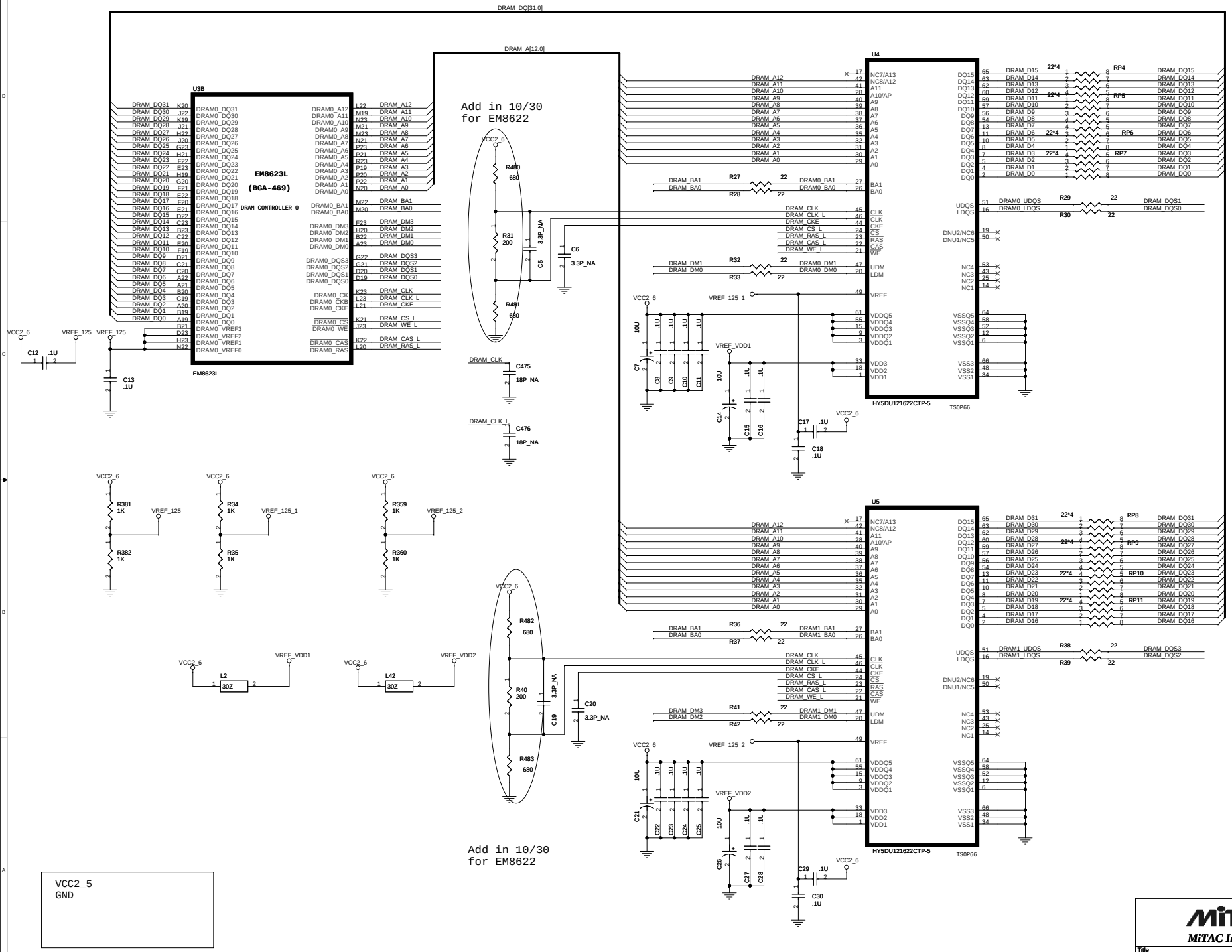

MiTAC International Corp.

Title: SDRAM DDR I/F

Size: C | Document Number: Advanced DMA (D117) | Rev: R0F

Date: Tuesday, March 20, 2007 | Sheet 4 of 21

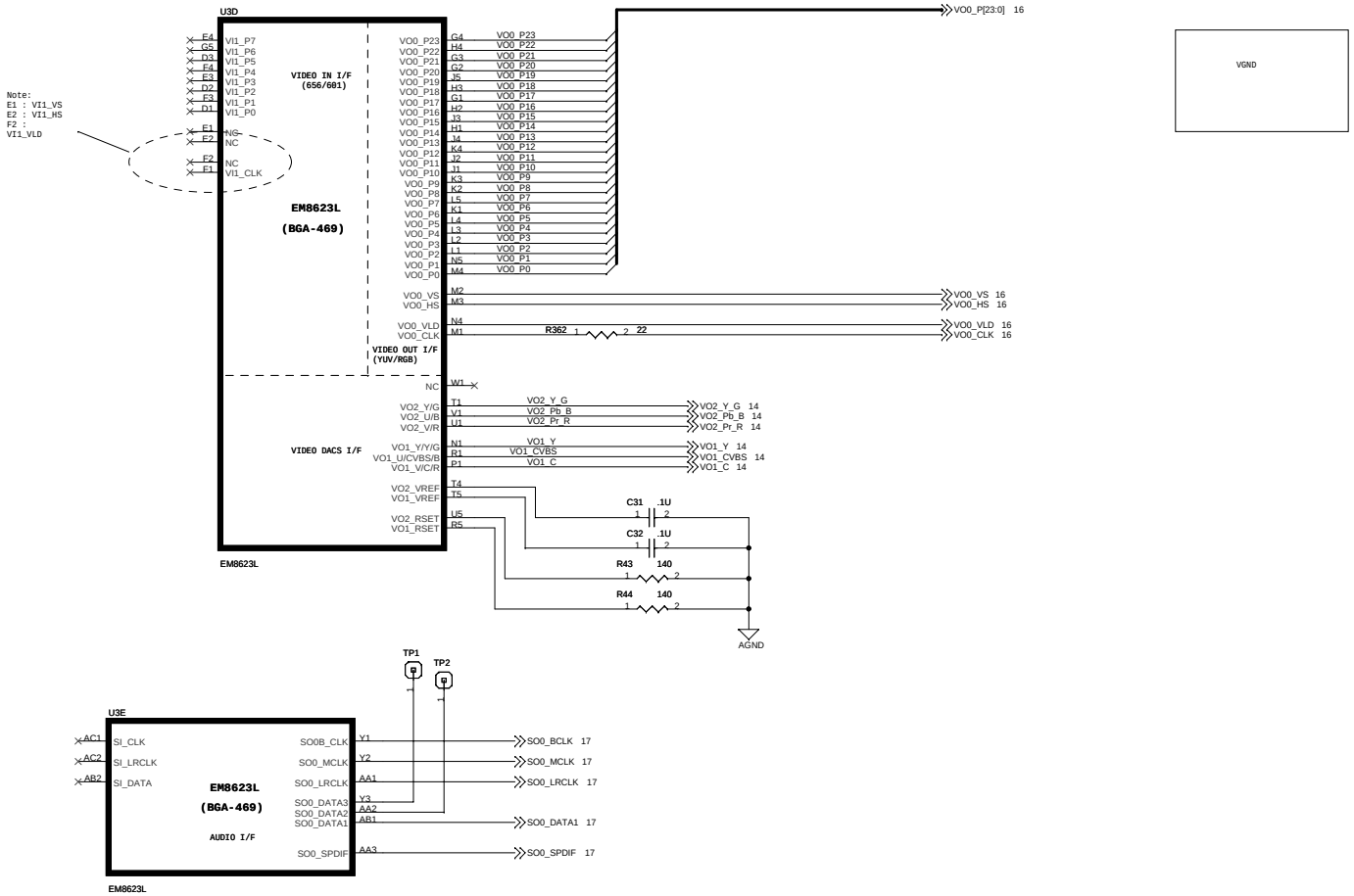

MiTAC International Corp.

Title		
05-EM8623L_VIDEO & AUDIO I/F		
Size C	Document Number Advanced DMA (D117)	Rev R0F
Date: Tuesday, March 20, 2007	Sheet 5 of 21	

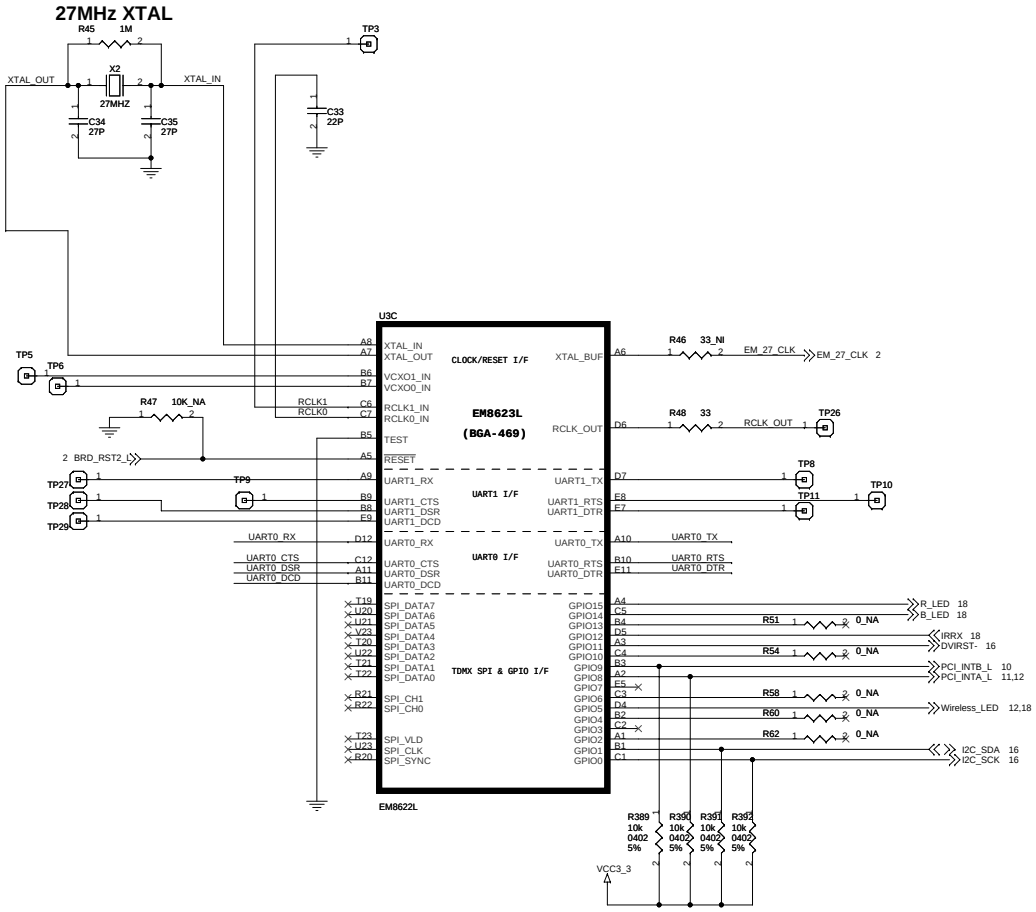

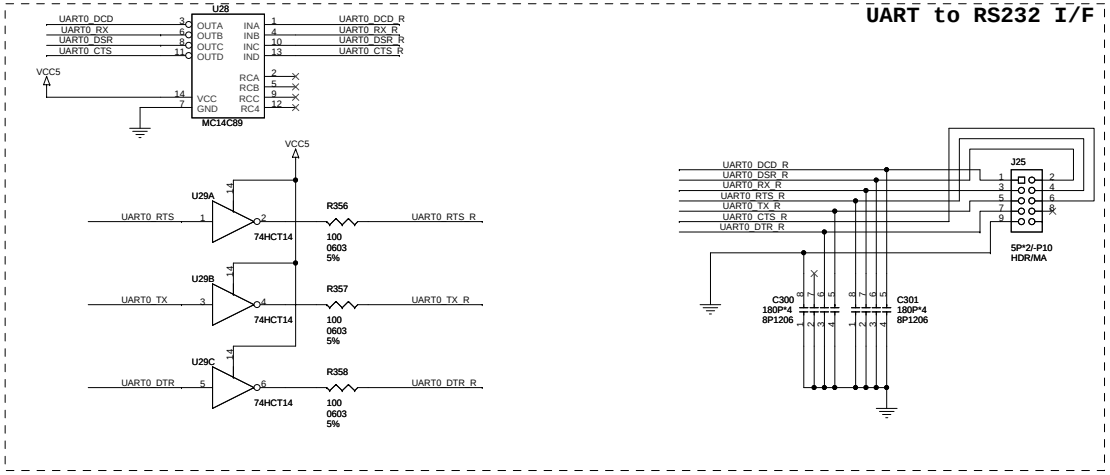

MiTAC International Corp.

Title	06-EM8623L_CLK UARTS GPIO	
Size C	Document Number Advanced DMA (D117)	Rev ROF
Date: Tuesday, March 20, 2007	Sheet 6 of 21	

NOTE: CONNECT JP1&2 TO BOOT FROM SERIAL FLASH

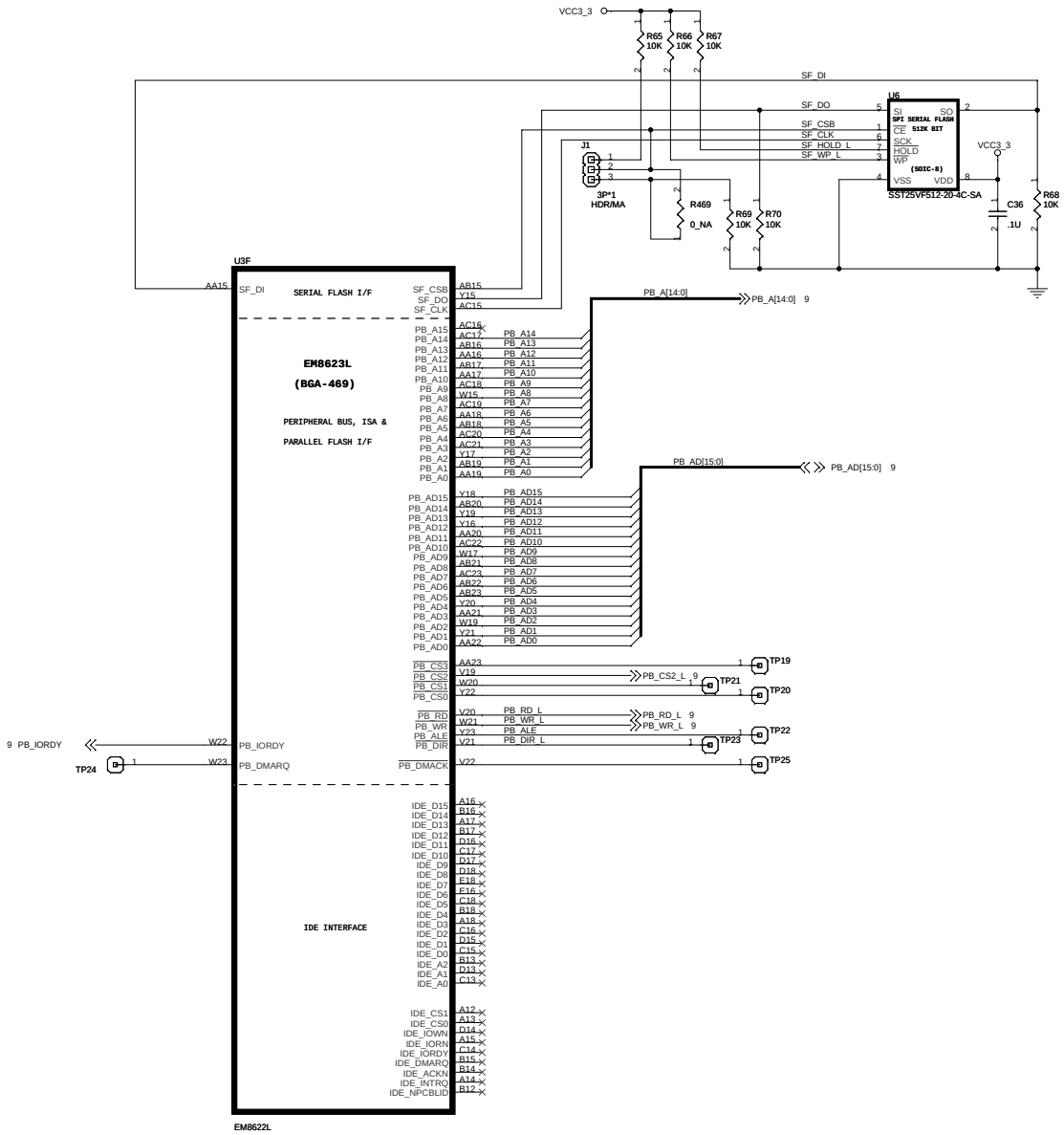

VCC3_3
GND

MiTAC International Corp.

Title: 07-EM8623L_PERIPHERAL,IDE I/F

Size: C | Document Number: Advanced DMA (D117) | Rev: R0F

Date: Tuesday, March 20, 2007 | Sheet 7 of 21

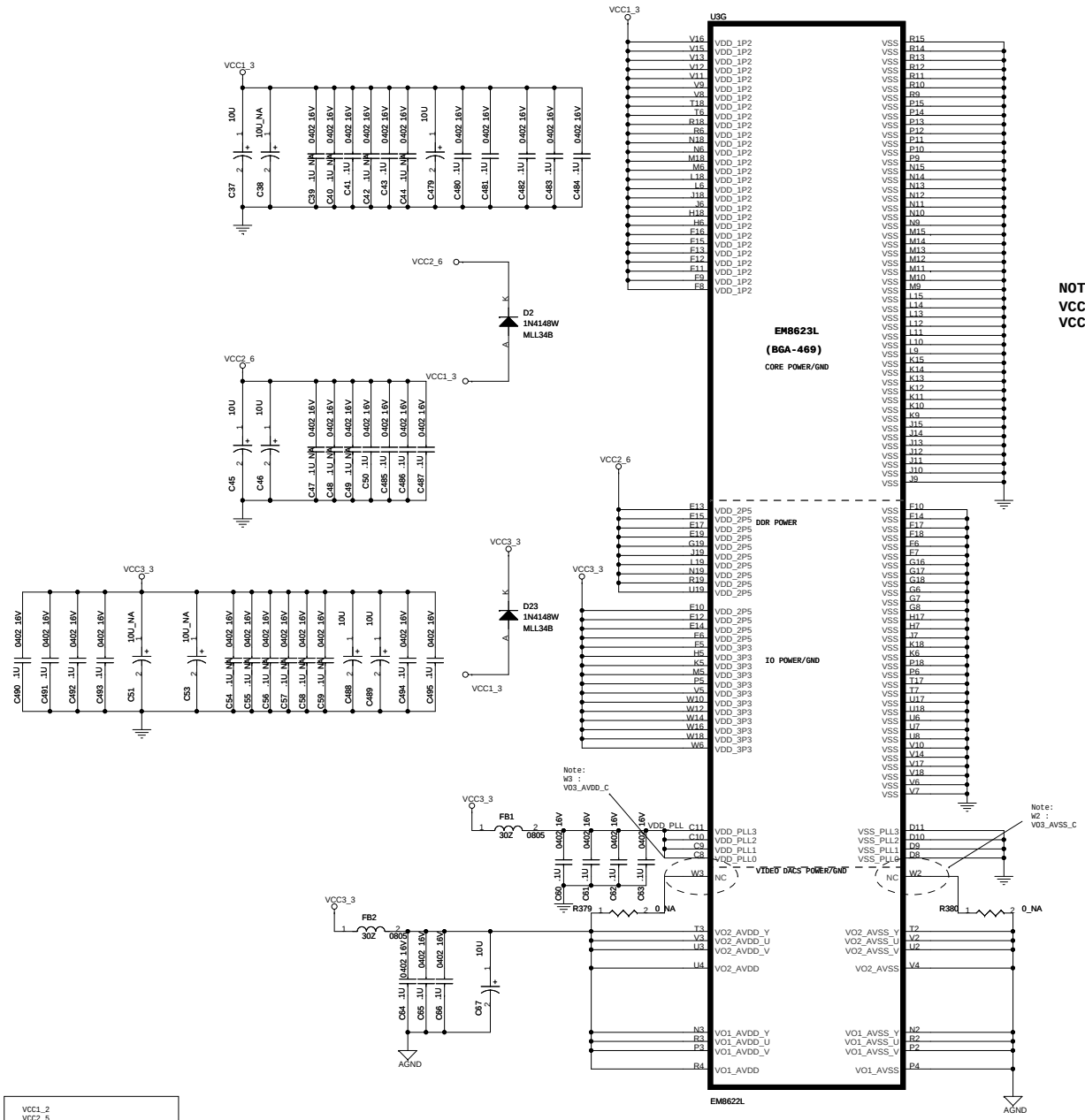

NOTE :
VCC3_3 should rise before VCC1_2
VCC2_5 should rise before VCC1_2

VCC1_2
VCC2_5
VCC3_3
GND
VGND

MiTAC International Corp.

Title	
	08-EM8623L_POWER & GND
Size: C	Document Number: Advanced DMA (D117)
Rev: R0E	
Date: Tuesday, March 20, 2007	Sheet 8 of 21

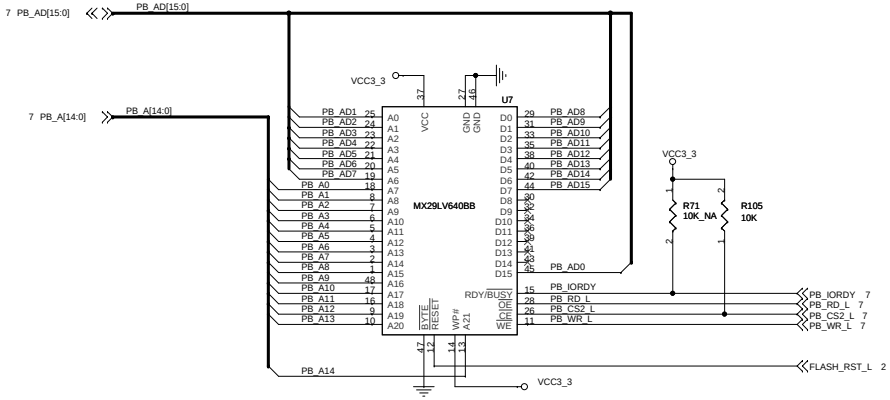

MiTAC International Corp.

Title: 09-PARALLEL FLASH

Size	Document Number	Rev
C	Advanced DMA (D117)	R0F

Date: Tuesday, March 20, 2007 Sheet 9 of 21

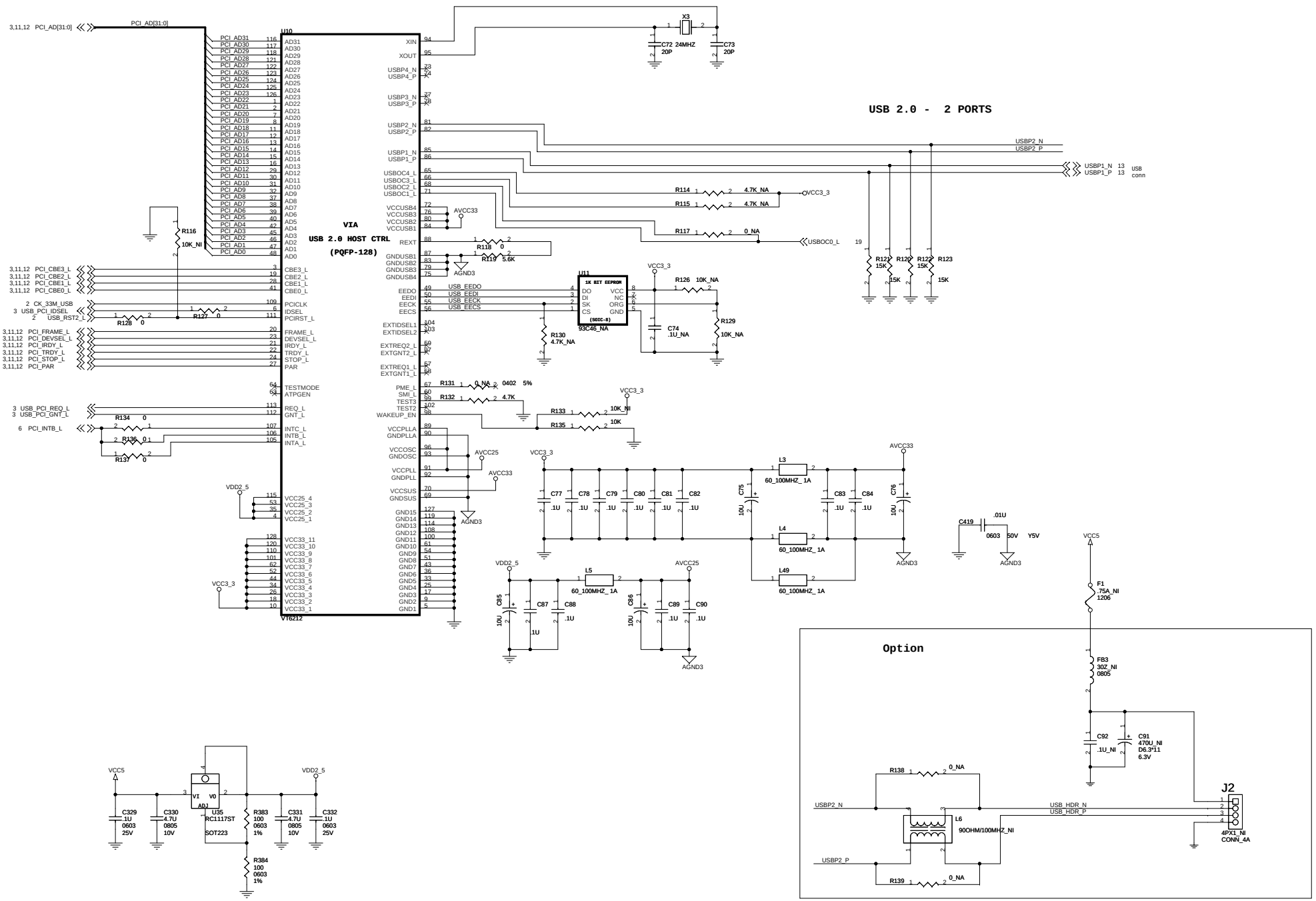

MiTAC International Corp.

Title		
10-USB2.0 Controller VT6212		
Size C	Document Number Advanced DMA (D117)	Rev R0E
Date: Tuesday, March 20, 2007	Sheet 10 of 21	

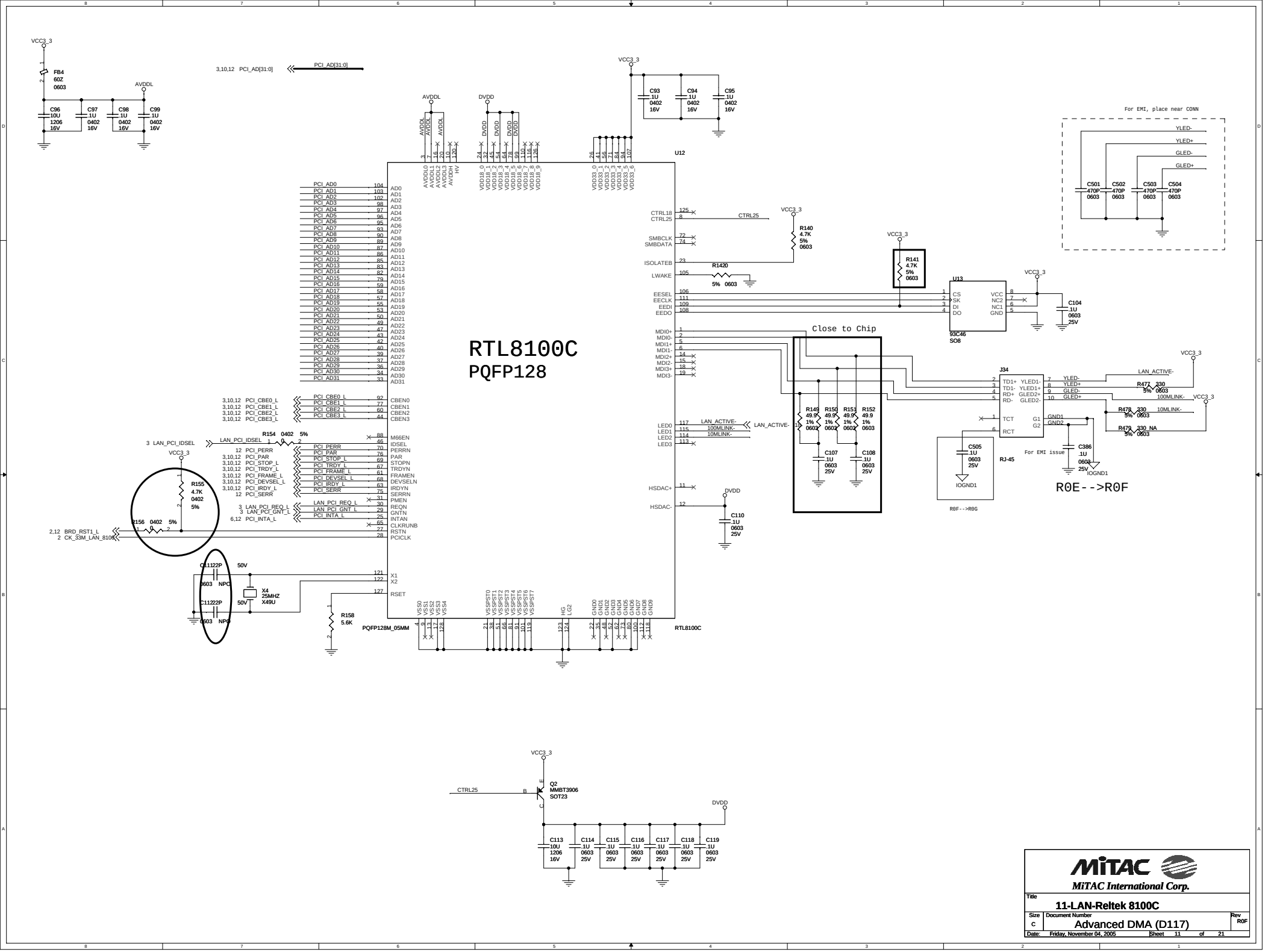
RTL8100C
PQFP128
U12
RTL8100C
PQFP128M_05MM
U13
93C46
SO8
J34
RJ-45
Close to Chip
For EMI, place near CONN
For EMI issue
R0E-->R0F
R0F-->R0G
PCI_AD[31:0]
3,10,12 PCI_AD[31:0]
VCC3_3
AVDDL
DVDD
FB4
60Z
0603
C96
10U
1206
16V
C97
1U
0402
16V
C98
1U
0402
16V
C99
1U
0402
16V
C93
1U
0402
16V
C94
1U
0402
16V
C95
1U
0402
16V
C501
470P
0603
C502
470P
0603
C503
470P
0603
C504
470P
0603
R140
4.7K
5%
0603
R141
4.7K
5%
0603
R1420
5% 0603
C104
1U
0603
25V
R149
49.9
1%
0603
R150
49.9
1%
0603
R151
49.9
1%
0603
R152
49.9
1%
0603
C107
1U
0603
25V
C108
1U
0603
25V
C110
1U
0603
25V
C505
1U
0603
25V
C386
1U
0603
25V
R477
330
5% 0603
R478
330
5% 0603
R479
330
5% 0603
R154
0402
5%
R155
4.7K
0402
5%
R156
0402
5%
R158
5.6K
X4
25MHZ
X49U
C11122P
0603
NPO
50V
2,12 BRD_RST1_L
2 CK_33M_LAN_8100
3 LAN_PCI_IDSEL
LAN_PCI_IDSEL
LAN_PCI_REQ_L
LAN_PCI_GNT_L
PCI_INTA_L
LAN_ACTIVE-
100MLINK-
10MLINK-
CTRL25
Q2
MMBT3906
SOT23
C113
10U
1206
16V
C114
1U
0603
25V
C115
1U
0603
25V
C116
1U
0603
25V
C117
1U
0603
25V
C118
1U
0603
25V
C119
1U
0603
25V
MiTAC
MiTAC International Corp.
Title
11-LAN-Reltek 8100C
Size
C
Document Number
Advanced DMA (D117)
Rev
R0F
Date: Friday, November 04, 2005
Sheet 11 of 21

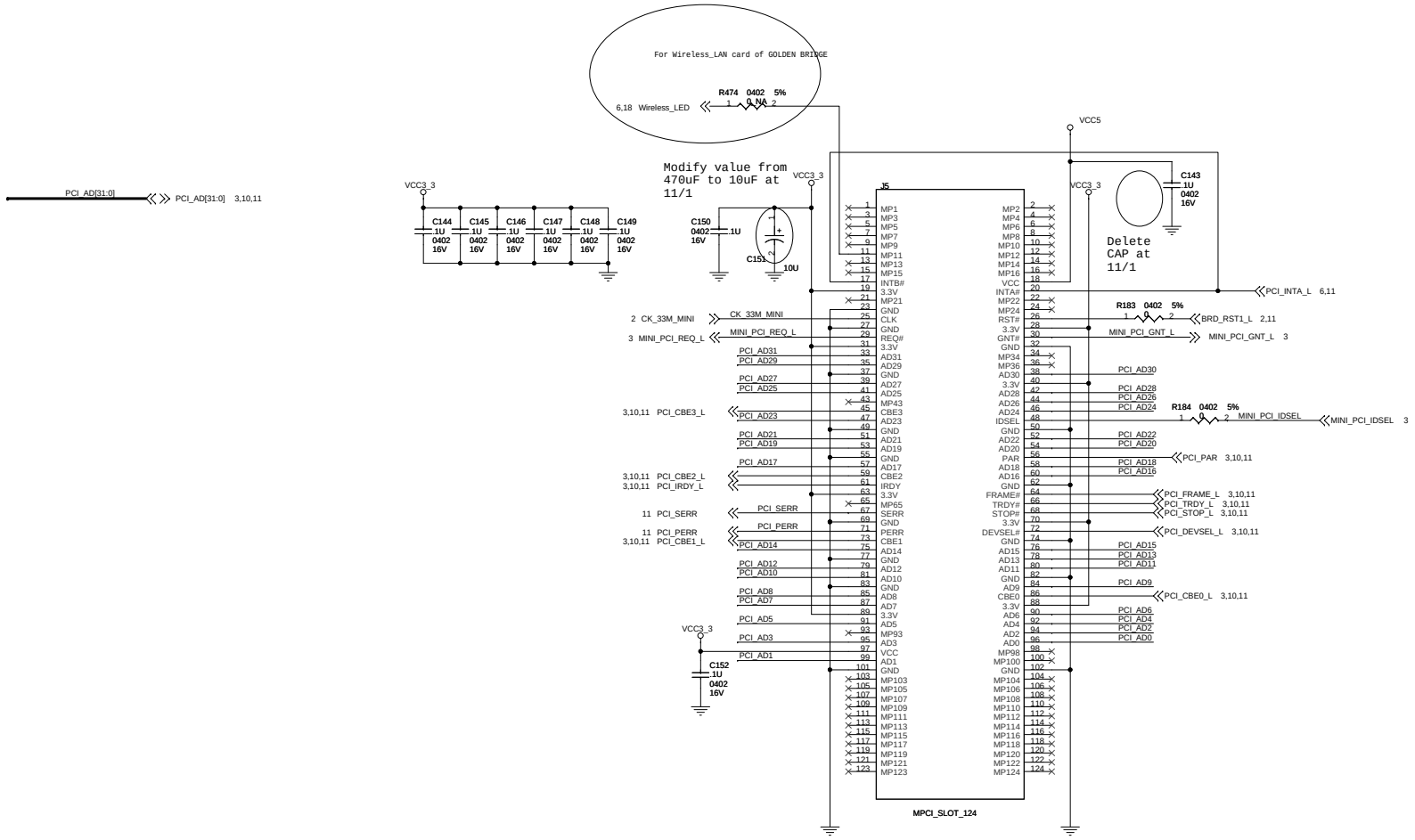

MiTAC International Corp.

Title		
12-Mini PCI		
Size C	Document Number Advanced DMA (D117)	Rev R0F
Date: Friday, November 04, 2005	Sheet 12 of 21	

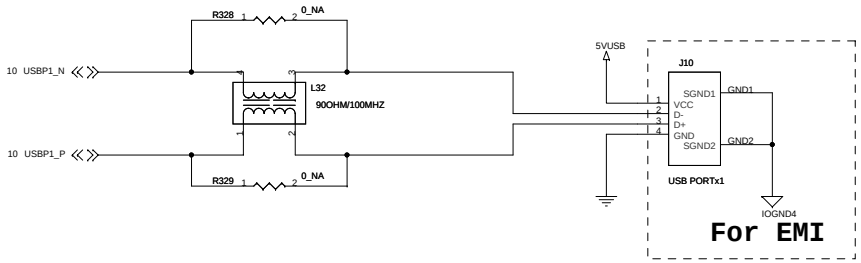

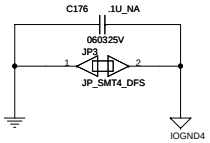

MiTAC International Corp.

Title	13-USB conn	
Size C	Document Number Advanced DMA (D117)	Rev R0F
Date: Friday, November 04, 2005	Sheet 13 of 21	

Add composite CVBS

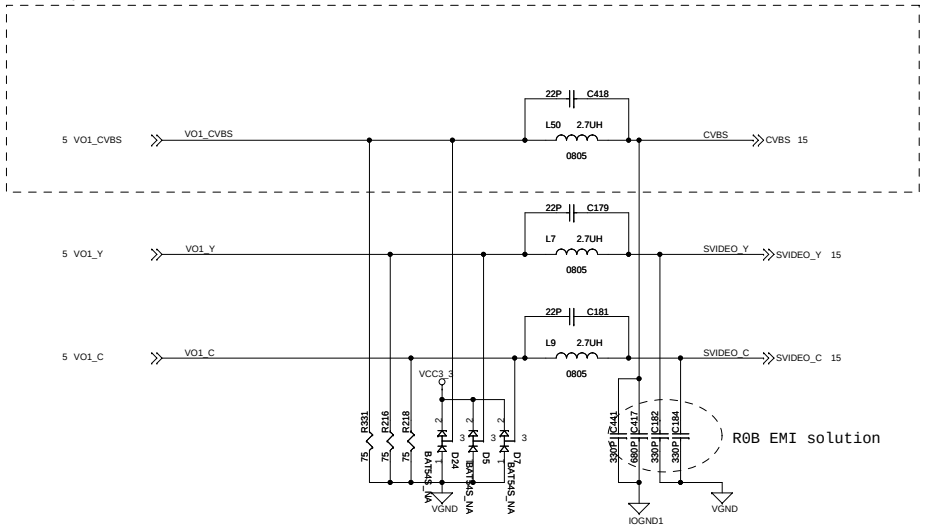

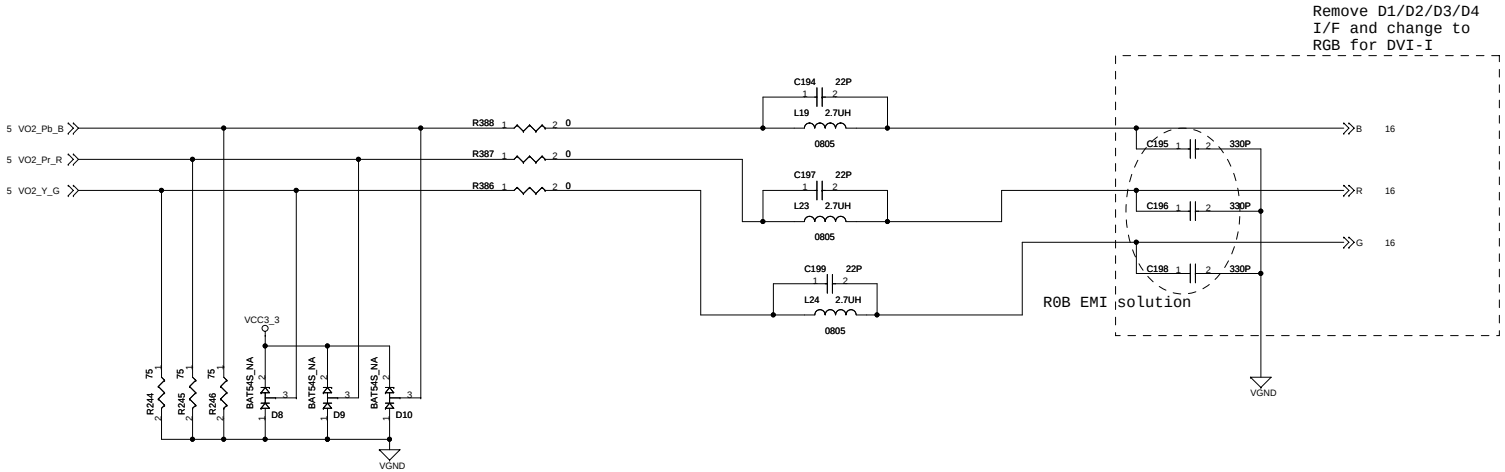

MiTAC International Corp.

Title	14-VIDEO_OUT_LOGIC	
Size C	Document Number Advanced DMA (D117)	Rev R0F
Date: Tuesday, March 20, 2007	Sheet 14 of 21	

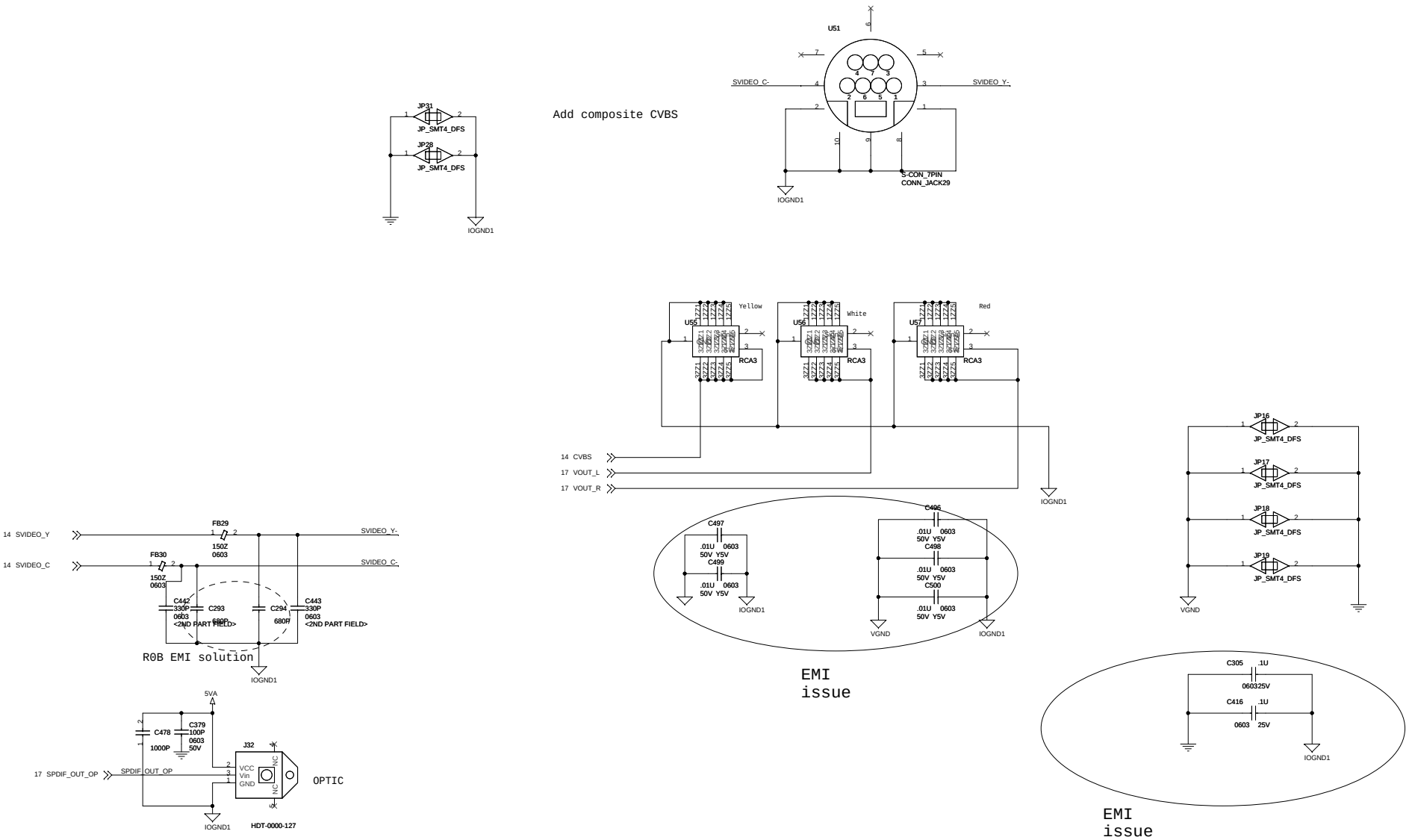

MiTAC International Corp.

Title		
15-REAR CONNECTORS(1)		
Size C	Document Number Advanced DMA (D117)	Rev R0F
Date: Friday, November 04, 2005	Sheet 15 of 21	

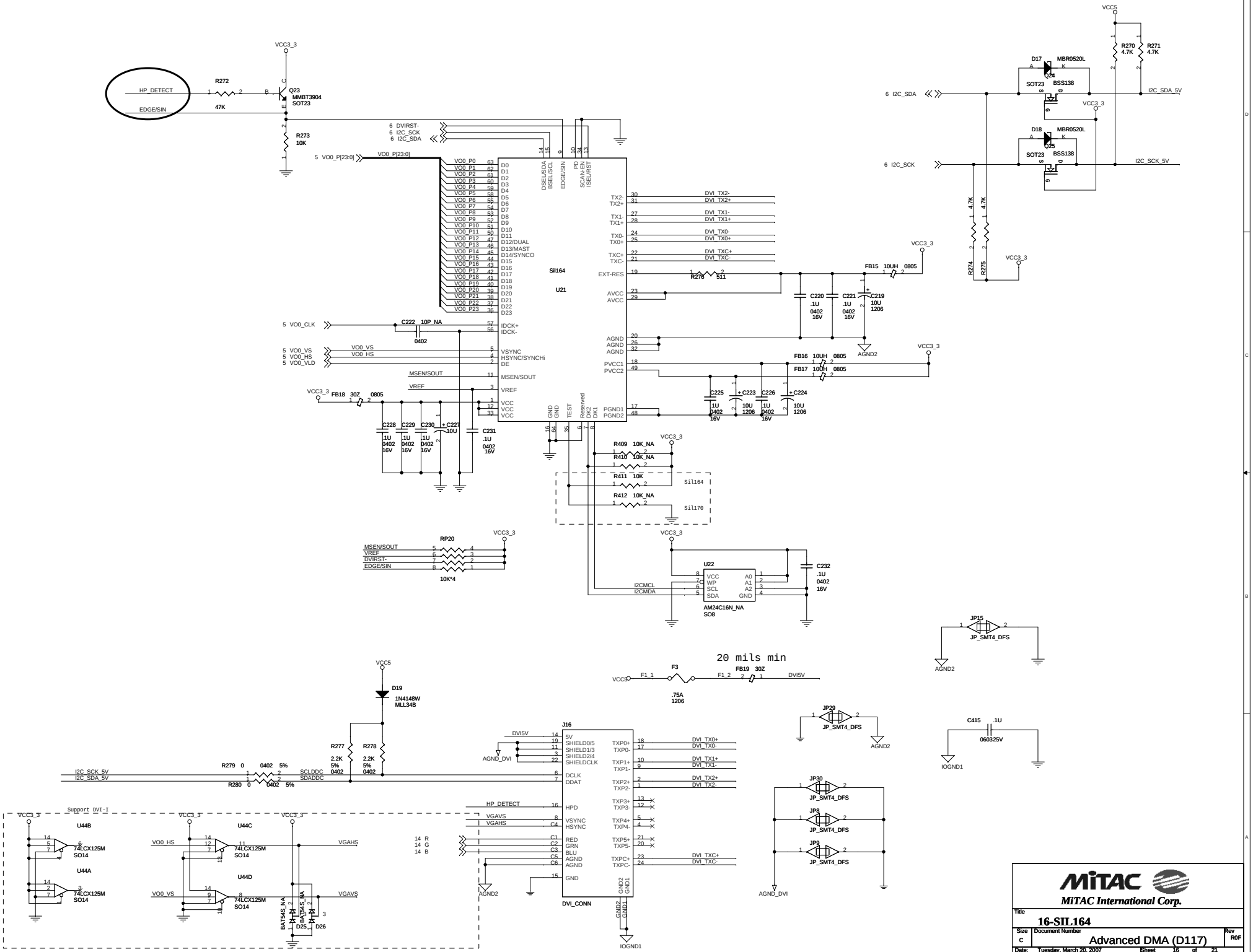

MiTAC International Corp.

Title: 16-SIL164

Size: C | Document Number: Advanced DMA (D117) | Rev: R0F

Date: Tuesday, March 20, 2007 | Sheet 16 of 21

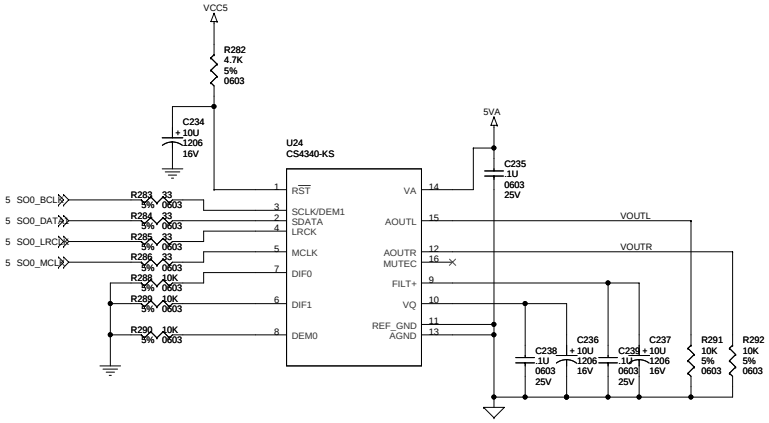

SPDIF

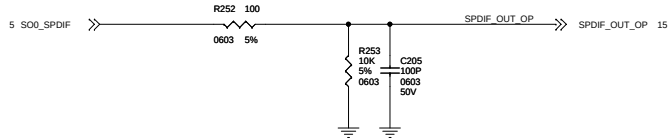

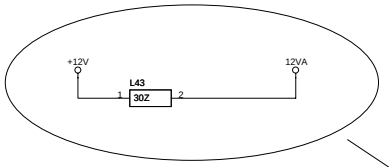

10/21
add BEAD L43 for VCC12V transfer to 12VA

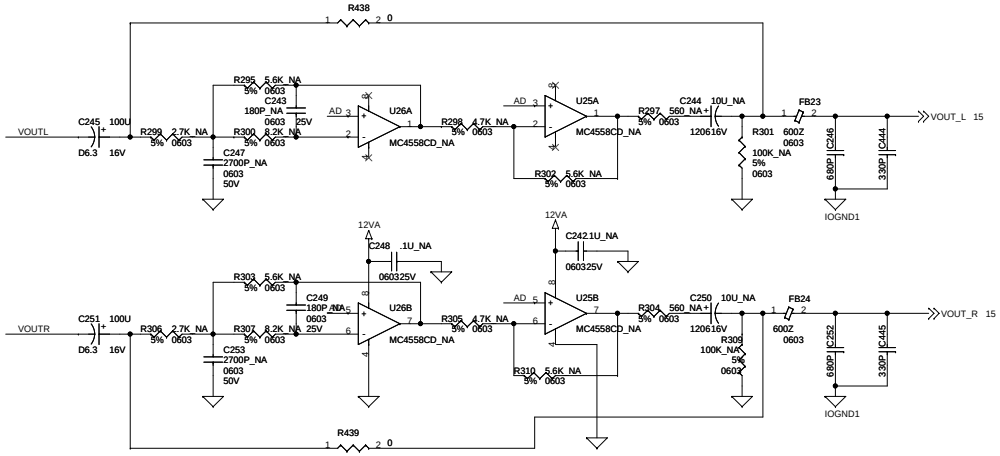

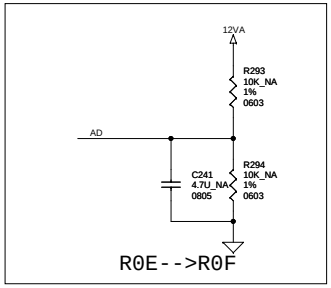

MiTAC International Corp.

Title		
17-I2S_AUDIO		
Size C	Document Number Advanced DMA (D117)	Rev R0F
Date: Friday, November 04, 2005	Sheet 17 of 21	

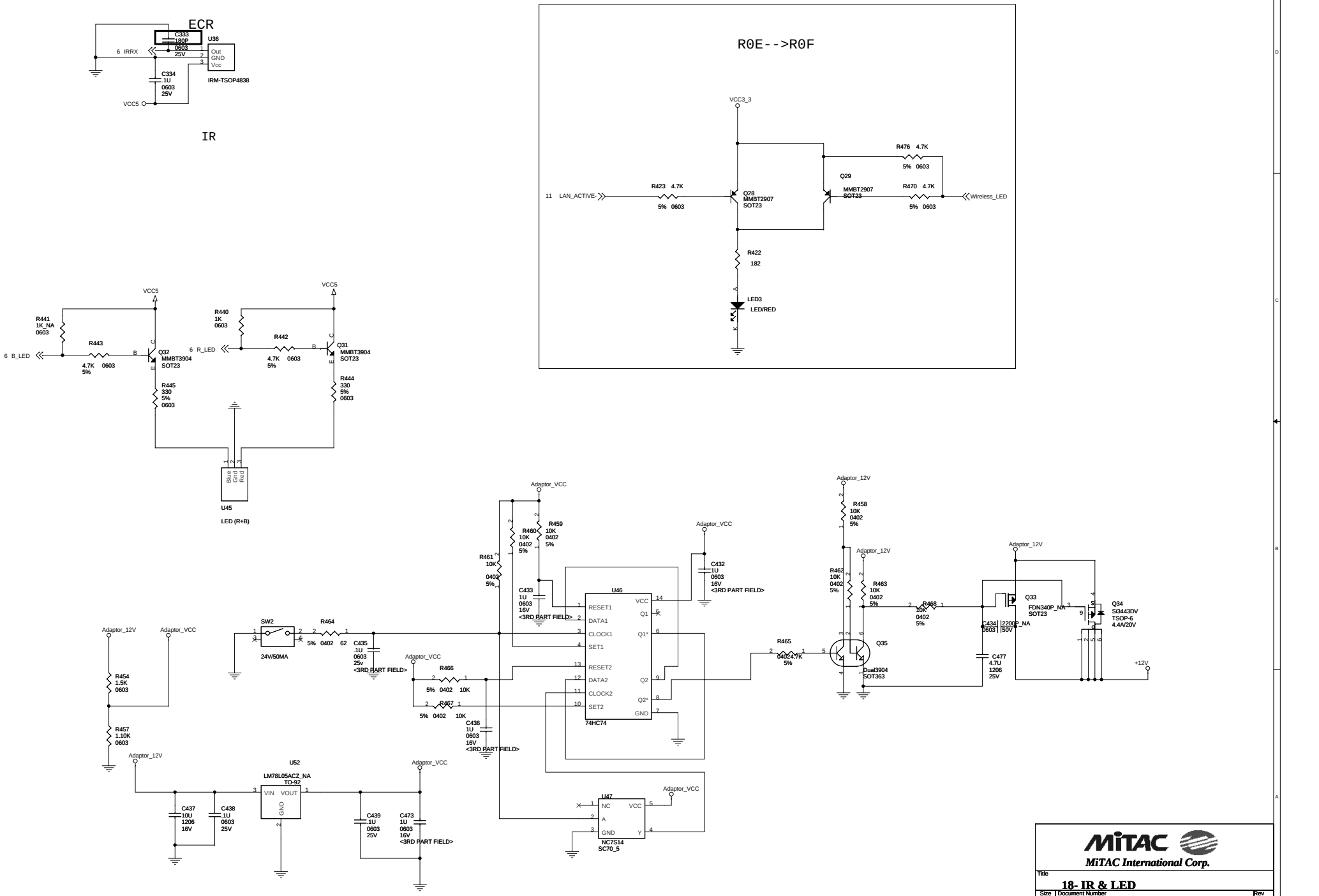
ECR
C333
180P
0603
25V
U36
6 IRRX
Out
GND
Vcc
IRM-TSOP4838
C334
.1U
0603
25V
VCC5
IR
R0E-->R0F
VCC3_3
R476 4.7K
5% 0603
Q29
MMBT2907
SOT23
R470 4.7K
5% 0603
Wireless_LED
11 LAN_ACTIVE-
R423 4.7K
5% 0603
Q28
MMBT2907
SOT23
R422
182
LED3
LED/RED
VCC5
R441
1K_NA
0603
R443
4.7K 0603
5%
6 B_LED
Q32
MMBT3904
SOT23
R445
330
5%
0603
R440
1K
0603
R442
4.7K 0603
5%
6 R_LED
Q31
MMBT3904
SOT23
R444
330
5%
0603
Blue
Gnd
Red
U45
LED (R+B)
Adaptor_VCC
R460
10K
0402
5%
R459
10K
0402
5%
R461
10K
0402
5%
C433
1U
0603
16V
<3RD PART FIELD>
U46
RESET1
DATA1
CLOCK1
SET1
RESET2
DATA2
CLOCK2
SET2
VCC
Q1
Q1*
Q2
Q2*
GND
74HC74
C432
1U
0603
16V
<3RD PART FIELD>
Adaptor_12V
R458
10K
0402
5%
R462
10K
0402
5%
R463
10K
0402
5%
R468
10K
0402
5%
Q33
FDN340P_NA
SOT23
Q34
Si3443DV
TSOP-6
4.4A/20V
C434
2200P_NA
0603
50V
C477
4.7U
1206
25V
+12V
R465
0402 4.7K
5%
Q35
Dual3904
SOT363
SW2
24V/50MA
R464
5% 0402 62
C435
1U
0603
25v
<3RD PART FIELD>
R466
5% 0402 10K
R467
5% 0402 10K
C436
1U
0603
16V
<3RD PART FIELD>
R454
1.5K
0603
R457
1.10K
0603
U52
LM78L05ACZ_NA
TO-92
VIN
VOUT
GND
C437
10U
1206
16V
C438
.1U
0603
25V
C439
1U
0603
25V
C473
1U
0603
16V
<3RD PART FIELD>
U47
NC
A
GND
VCC
Y
NC7S14
SC70_5
MiTAC
MiTAC International Corp.
Title
18- IR & LED
Size
C
Document Number
Advanced DMA (D117)
Rev
R0F
Date: Friday, November 04, 2005
Sheet 18 of 21

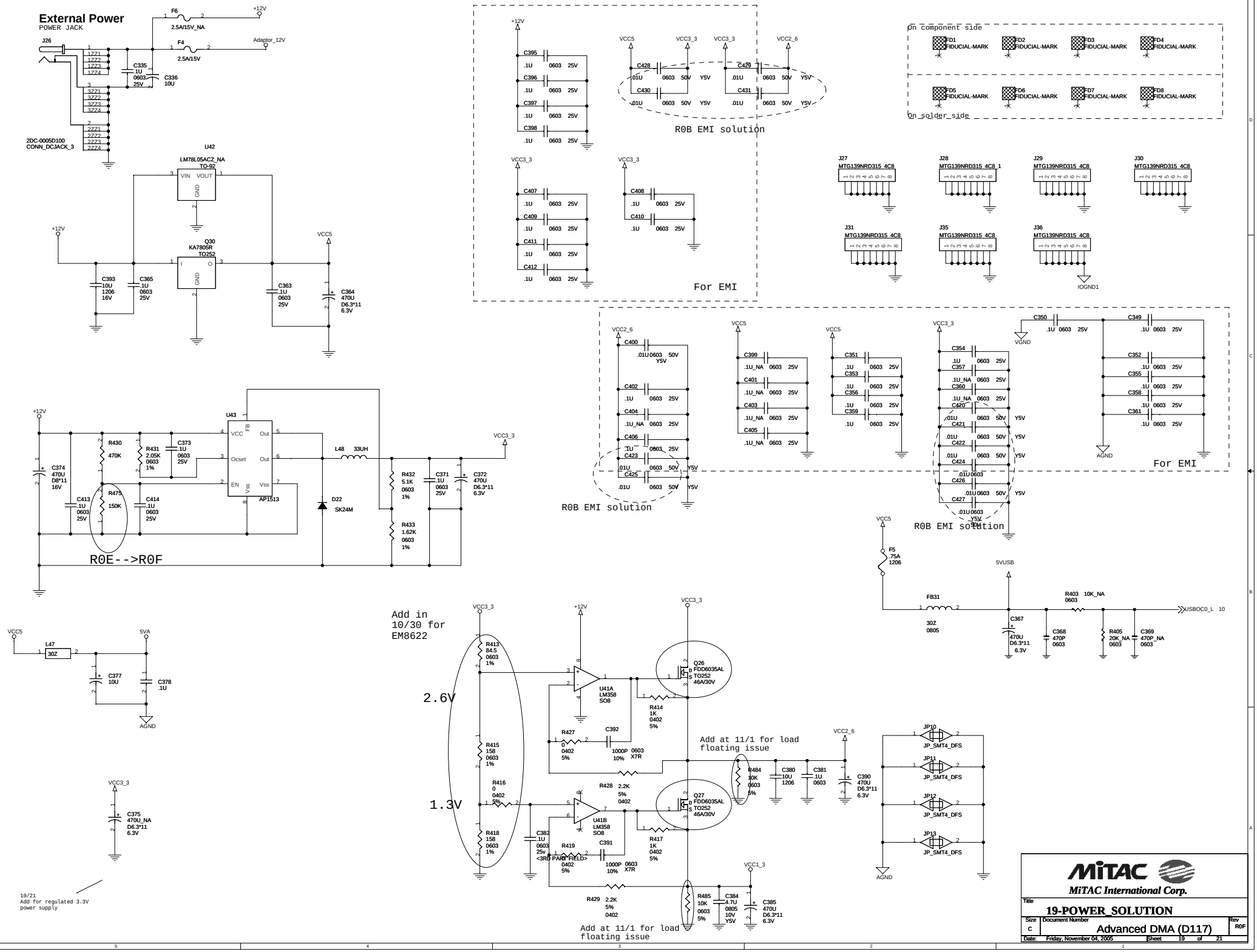
External Power
POWER JACK
J26
2DC-0005D100
CONN_DCJACK_3
F6
2.5A/15V_NA
F4
2.5A/15V
+12V
Adaptor_12V
C335 .1U 0603 25V
C336 10U
U42
LM78L05ACZ_NA
TO-92
VIN VOUT GND
Q30
KA7805R
TO252
I O GND
C393 10U 1206 16V
C365 .1U 0603 25V
C363 .1U 0603 25V
C364 470U D6.3*11 6.3V
VCC5
C395 .1U 0603 25V
C396 .1U 0603 25V
C397 .1U 0603 25V
C398 .1U 0603 25V
VCC3_3
C407 .1U 0603 25V
C409 .1U 0603 25V
C411 .1U 0603 25V
C412 .1U 0603 25V
C408 .1U 0603 25V
C410 .1U 0603 25V
VCC5
C428 .01U 0603 50V Y5V
C430 .01U 0603 50V Y5V
VCC3_3
C429 .01U 0603 50V Y5V
C431 .01U 0603 50V Y5V
VCC2_6
R0B EMI solution
For EMI
On component side
FD1 FIDUCIAL-MARK
FD2 FIDUCIAL-MARK
FD3 FIDUCIAL-MARK
FD4 FIDUCIAL-MARK
FD5 FIDUCIAL-MARK
FD6 FIDUCIAL-MARK
FD7 FIDUCIAL-MARK
FD8 FIDUCIAL-MARK
On solder side
J27 MTG139NRD315_4C8
J28 MTG139NRD315_4C8_1
J29 MTG139NRD315_4C8
J30 MTG139NRD315_4C8
J31 MTG139NRD315_4C8
J35 MTG139NRD315_4C8
J36 MTG139NRD315_4C8
IOGND1
VCC2_6
C400 .01U 0603 50V Y5V
C402 .1U 0603 25V
C404 .1U_NA 0603 25V
C406 .1U 0603 25V
C423 .01U 0603 50V Y5V
C425 .01U 0603 50V Y5V
R0B EMI solution
VCC5
C399 .1U_NA 0603 25V
C401 .1U_NA 0603 25V
C403 .1U_NA 0603 25V
C405 .1U_NA 0603 25V
C351 .1U 0603 25V
C353 .1U 0603 25V
C356 .1U 0603 25V
C359 .1U 0603 25V
VCC3_3
C354 .1U 0603 25V
C357 .1U_NA 0603 25V
C360 .1U_NA 0603 25V
C420 .1U_NA 0603 25V
C421 .01U 0603 50V Y5V
C422 .01U 0603 50V Y5V
C424 .01U 0603 50V Y5V
C426 .01U 0603 50V Y5V
C427 .01U 0603 50V Y5V
R0B EMI solution
C350 .1U 0603 25V
VGND
C349 .1U 0603 25V
C352 .1U 0603 25V
C355 .1U 0603 25V
C358 .1U 0603 25V
C361 .1U 0603 25V
AGND
For EMI
U43
AP1513
VCC FB Out Ocset Out EN Vss Vss
R430 470K
R431 2.05K 0603 1%
C373 1U 0603 25V
R475 150K
C374 470U D8*11 16V
C413 .1U 0603 25V
C414 .1U 0603 25V
L48 33UH
D22 SK24M
R432 5.1K 0603 1%
R433 1.62K 0603 1%
C371 .1U 0603 25V
C372 470U D6.3*11 6.3V
VCC3_3
R0E-->R0F
VCC5
F5 .75A 1206
5VUSB
FB31 30Z 0805
R403 10K_NA 0603
USBOC0_L 10
C367 470U D6.3*11 6.3V
C368 470P 0603
R405 20K_NA 0603
C369 470P_NA 0603
VCC5
L47 30Z
5VA
C377 10U
C378 .1U
AGND
VCC3_3
C375 470U_NA D6.3*11 6.3V
10/21
Add for regulated 3.3V power supply
Add in 10/30 for EM8622
2.6V
1.3V
R413 84.5 0603 1%
R415 158 0603 1%
R416 0 0402 5%
R418 158 0603 1%
U41A LM358 SO8
U41B LM358 SO8
R427 0 0402 5%
C392 1000P 0603 X7R 10%
R428 2.2K 5% 0402
C382 .1U 0603 25V
R419 <3RD PARTY FIELD> 0402 5%
C391 1000P 0603 X7R 10%
R429 2.2K 5% 0402
Q26 FDD6035AL TO252 46A/30V
Q27 FDD6035AL TO252 46A/30V
R414 1K 0402 5%
R417 1K 0402 5%
Add at 11/1 for load floating issue
R484 10K 0603 5%
C380 10U 1206
C381 .1U 0603
C390 470U D6.3*11 6.3V
VCC2_6
Add at 11/1 for load floating issue
R485 10K 0603 5%
C384 4.7U 0805 10V Y5V
C385 470U D6.3*11 6.3V
VCC1_3
JP10 JP_SMT4_DFS
JP11 JP_SMT4_DFS
JP12 JP_SMT4_DFS
JP13 JP_SMT4_DFS
AGND
MiTAC
MiTAC International Corp.
Title
19-POWER_SOLUTION
Size C
Document Number
Advanced DMA (D117)
Rev R0F
Date: Friday, November 04, 2005
Sheet 19 of 21

R0B----------->R0C

1. Add LED (R+B) Use GPIO Pin15, Pin14
2. I/OGnd1 connect GND for improve Video Output
3. Add Adapter 12V Switch Circuit and LED(R+B)
4. ADD R to lower RJ45 voltage
5. Improve USB2.0 signal
6. Add Fuse can use SW or Not

2005.4.15

R0C----------->R0D

Add power bottom and change LED function

1. Remove all parts related to USB2.0 function
2. Add R468 between Q34 pinG and Q35 pin6 and change C477 from 0.1u to 4.7U/16V/1206 to solve the 18A inrush current at the moment of power on. unmount Q33 and mount Q34 for current consumntion concern.
3. Remove some un-used 0 ohm from BOM list in page6
4. Change R457 from 1.1K to 1.27K to solve VCC dowm to 4.6V
5. Mount R440 with 1K ohm for LED issue
6. Mount R425 with 510 ohm for wireless LED issue
7. Add C478 for S/PDIF LED issue
8. Change wireless LED type for mechanical issue
9. Change PCB description from REV:R0C to R0D

2005.5.24

R0D----------->R0E

For EMI relayout

1. change FB29,FB30 from 120z to 150z
2. Mount C476,C475,C415,C416,C386,C305
3. Add C496~C500

2005.7.5

R0E----------->R0F

1. DEL R21,R23,25,R20,R22,R24
2. DEL R49,R50,R52,R53,R55,R56,R57,R59,R61,R63,R64,R287
   Change J34(LAN CON),
3. DEL R434,R436,R437,LED1,LED2,R420,R421,R473
   Add C501~C504 for EMI
4. Change C241 from 0603 to 0805(4.7UF) for Audio issue
5. LED function:DEL R471,R472,C388,Change Q28,Q29,R422,R423,R470
6. RS232:Change to 2*5 pin header
7. S-video:change to 7 pin
8. Del D7,D5,D9,D8,D10,D25,D26 (ESD function), U25,U26 (OP) from BOM

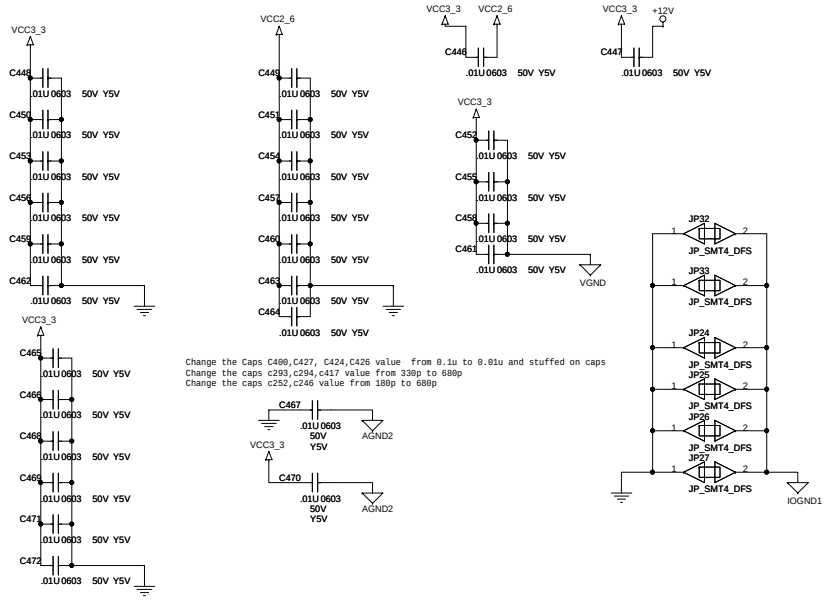

MiTAC International Corp.

Title: **21-EMI Solution**

Size	Document Number	Rev
C	Advanced DMA (D117)	R0F

Date: Tuesday, March 20, 2007 Sheet 21 of 21