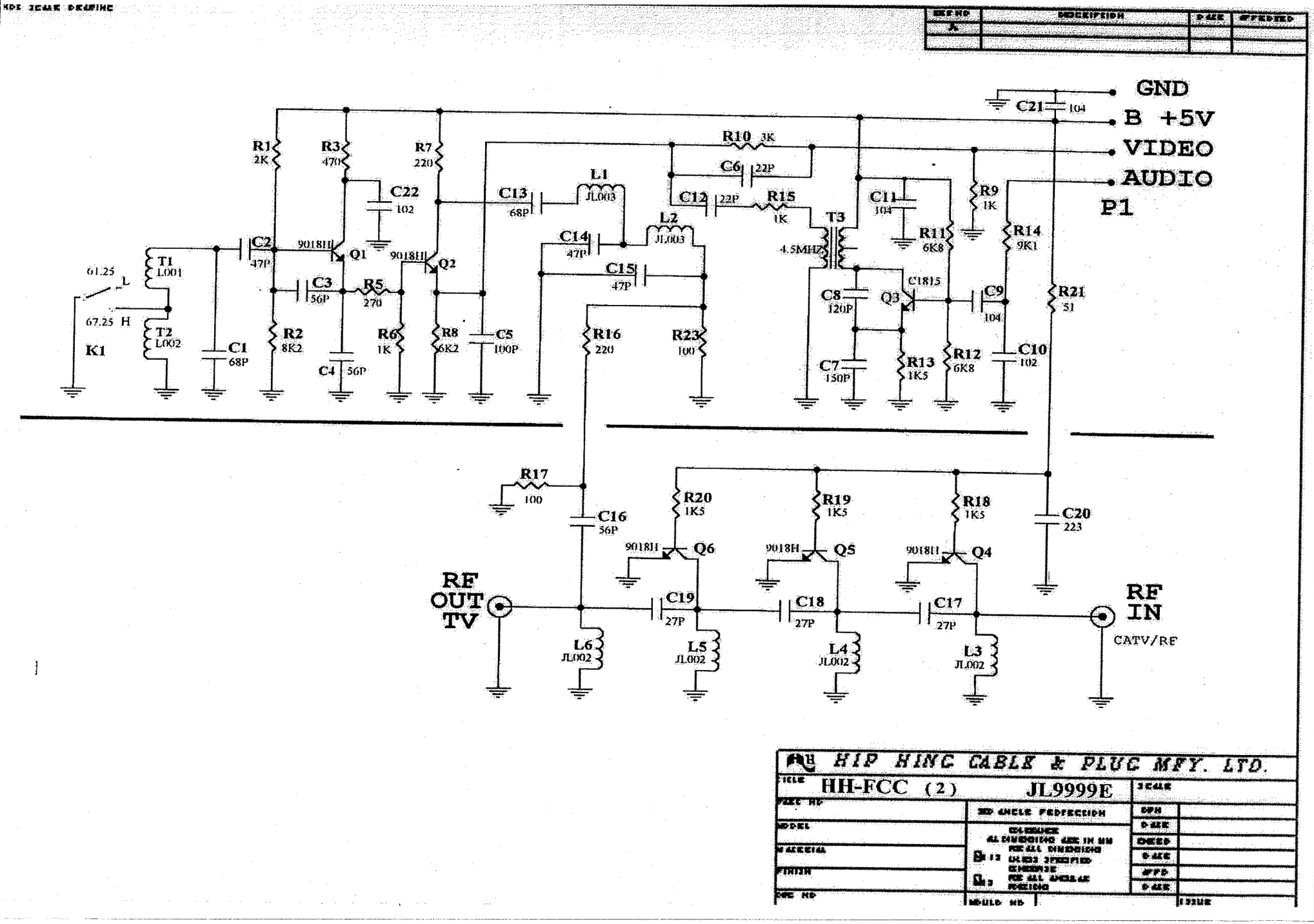
GND
B +5V
VIDEO
AUDIO
P1
C21 104
R1 2K
R3 470
R7 220
C22 102
C13 68P
L1 JL003
R10 3K
C6 22P
C12 22P
R15 1K
L2 JL003
C14 47P
C15 47P
T3 4.5MHZ
C11 104
R9 1K
R11 6K8
R14 9K1
C8 120P
Q3 C1815
C9 104
R21 51
C7 150P
R13 1K5
R12 6K8
C10 102
C2 47P
9018H Q1
9018H Q2
C3 56P
R5 270
T1 L001
61.25 L
67.25 H
T2 L002
K1
C1 68P
R2 8K2
C4 56P
R6 1K
R8 6K2
C5 100P
R16 220
R23 100
R17 100
C16 56P
R20 1K5
R19 1K5
R18 1K5
C20 223
9018H Q6
9018H Q5
9018H Q4
RF OUT TV
C19 27P
C18 27P
C17 27P
RF IN
CATV/RF
L6 JL002
L5 JL002
L4 JL002
L3 JL002
HIP HING CABLE & PLUG MFY. LTD.
HH-FCC (2)
JL9999E