RF TRANSMITTER BLOCK DIAGRAM

MAIN BLOCK DIAGRAM

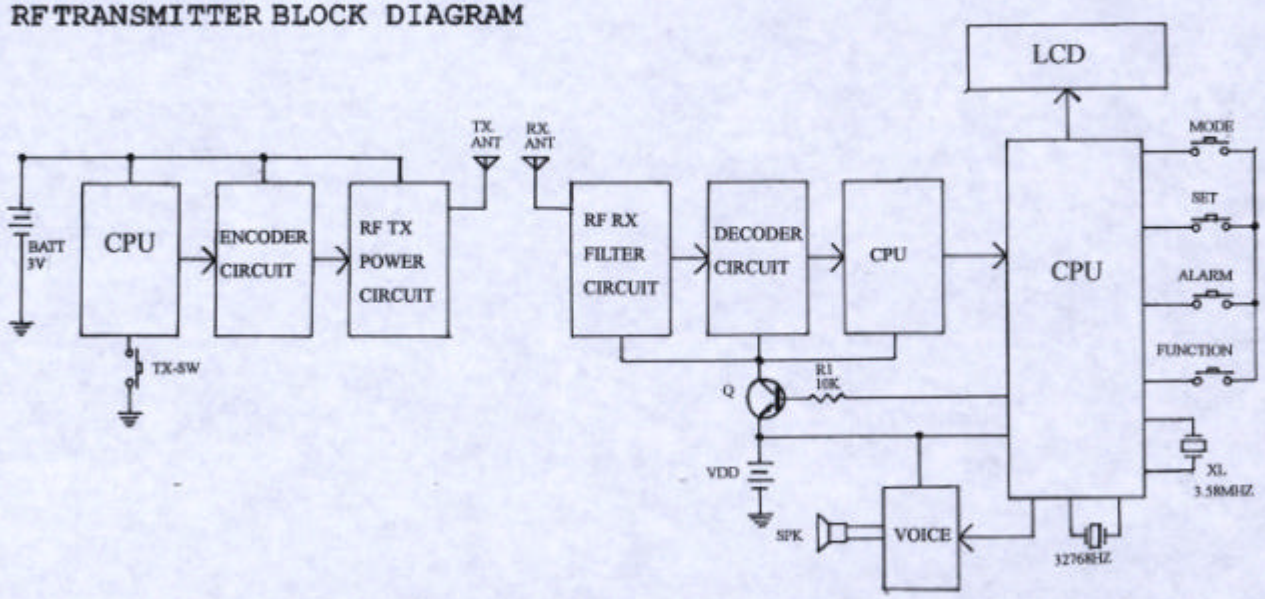

Size A4	Number HAPPY YO-YO	Revision 1.0
Date: 17-May-2004		Sheet of 1
File: C:\PROTEL\DEVHAXT-REC.SCH		Drawn By: