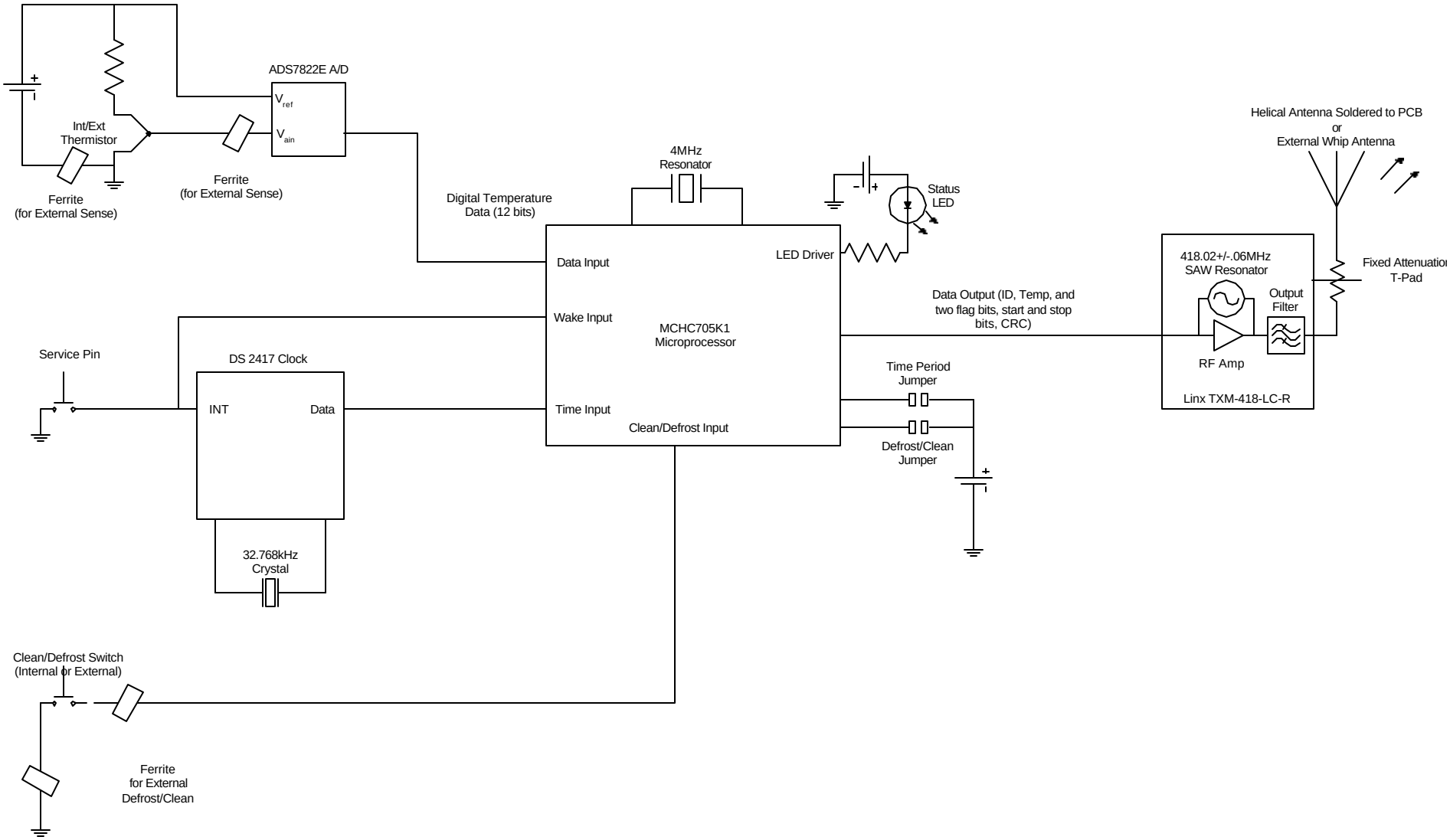809-354x and 809-35xx RF
Temperature Sensor