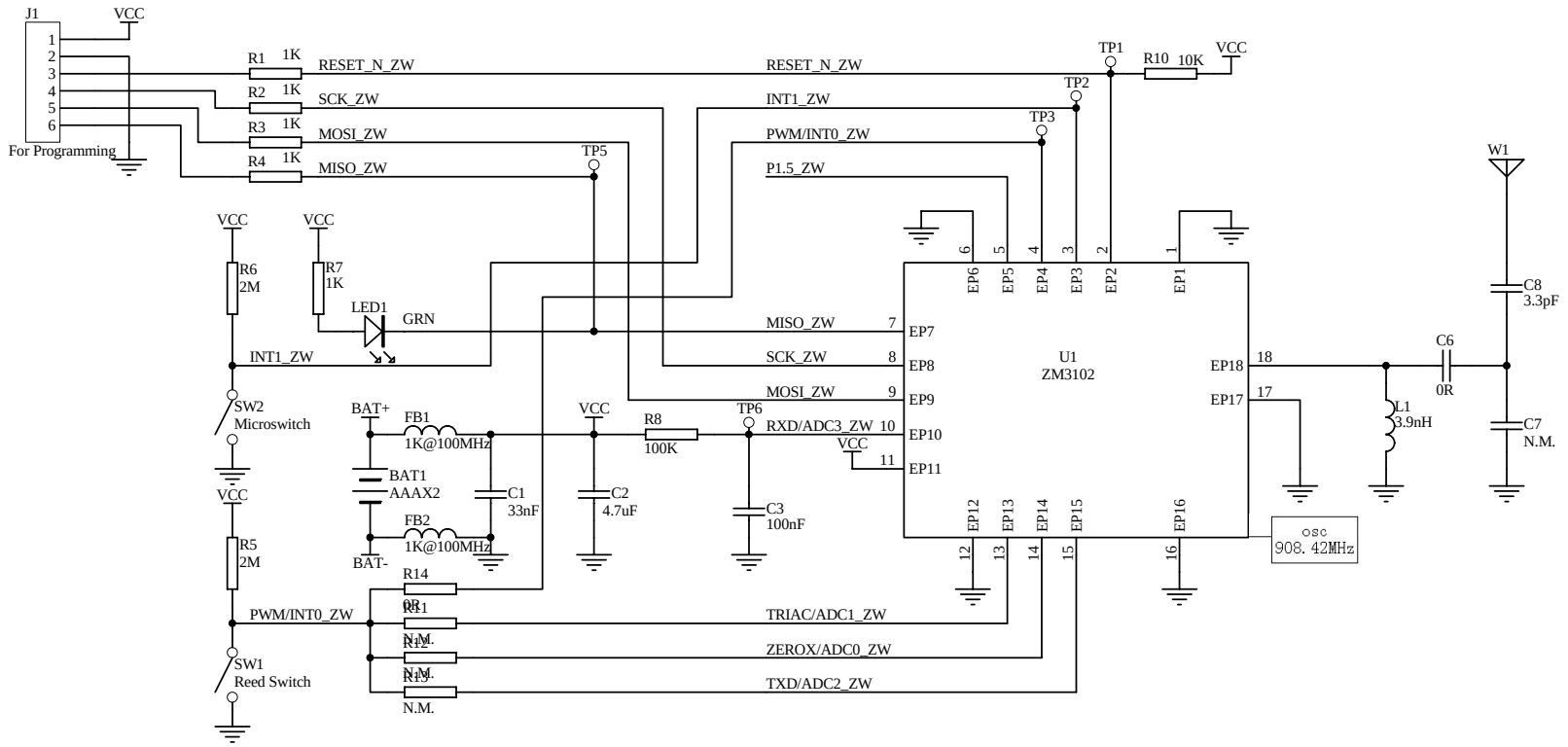

Title	Sanshi Zwave Windows Sensor		
Sheet NO.	1	Sheet Total	1
Date	2010.02.04	Revesion	V1.0
ORG.	Sanshi Technology Ltd.		