D	C	B	A	NO.	DESCRIPTION	PART NO.	MATERIAL	Q'TY	SURFACE TREATMENT	REMARK
					BLOCK DIAGRAM			·		·

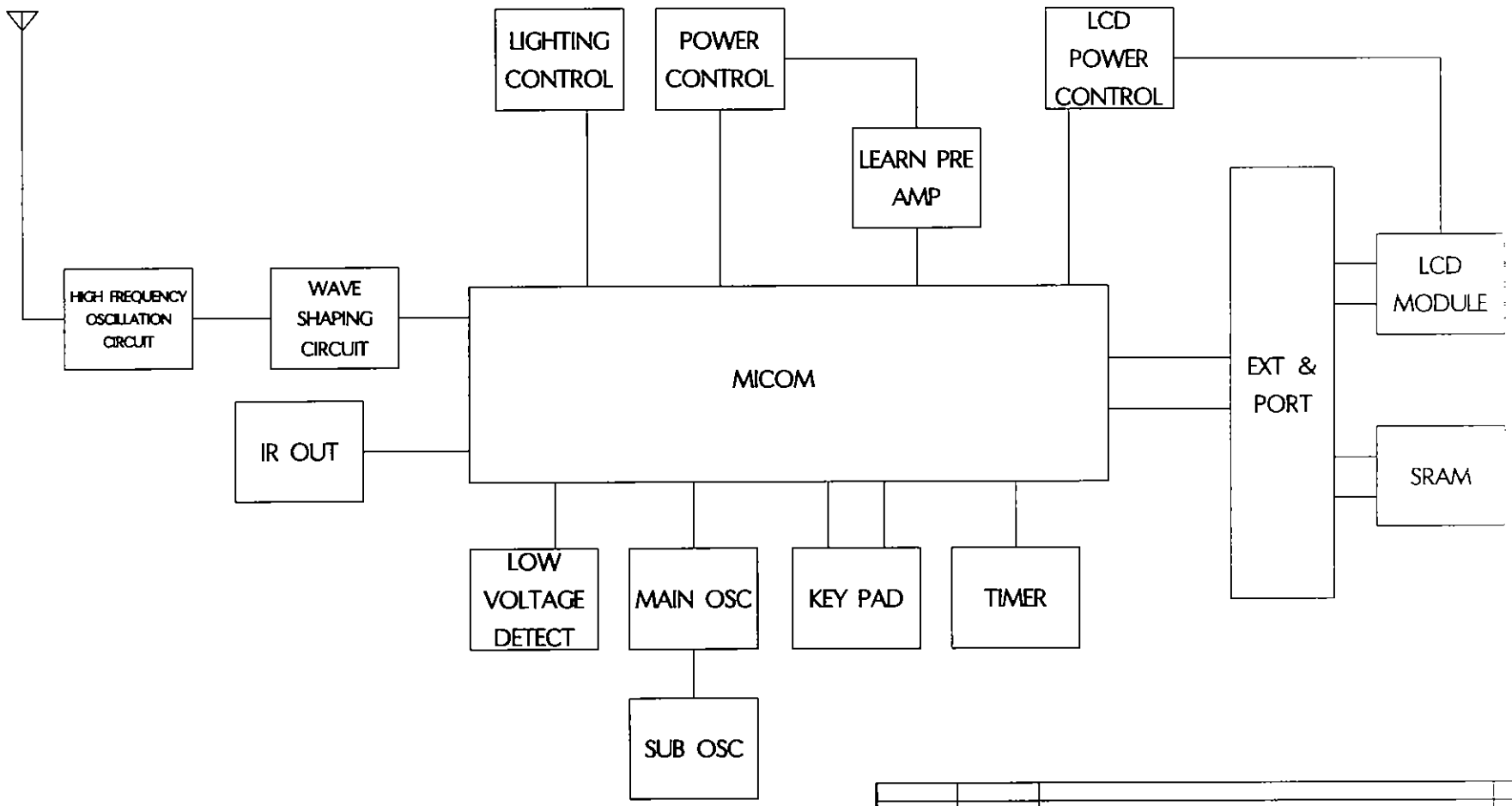

DATE	AUTHORIZED	CHANGED DETAILS	CHANGED BASIS

SCALE		UNIT mm	LIMIT ±0.1	DESC-RIPTION	BLOCK DIAGRAM
Drafter	Checked	Approved			
S. G RYU				MODEL NAME	URC-200
03. 10. 03					
OH SUNG ELECTRONICS CO., LTD.		REF. NO.	COMPO	P/NO.	
		STOCK NO.			