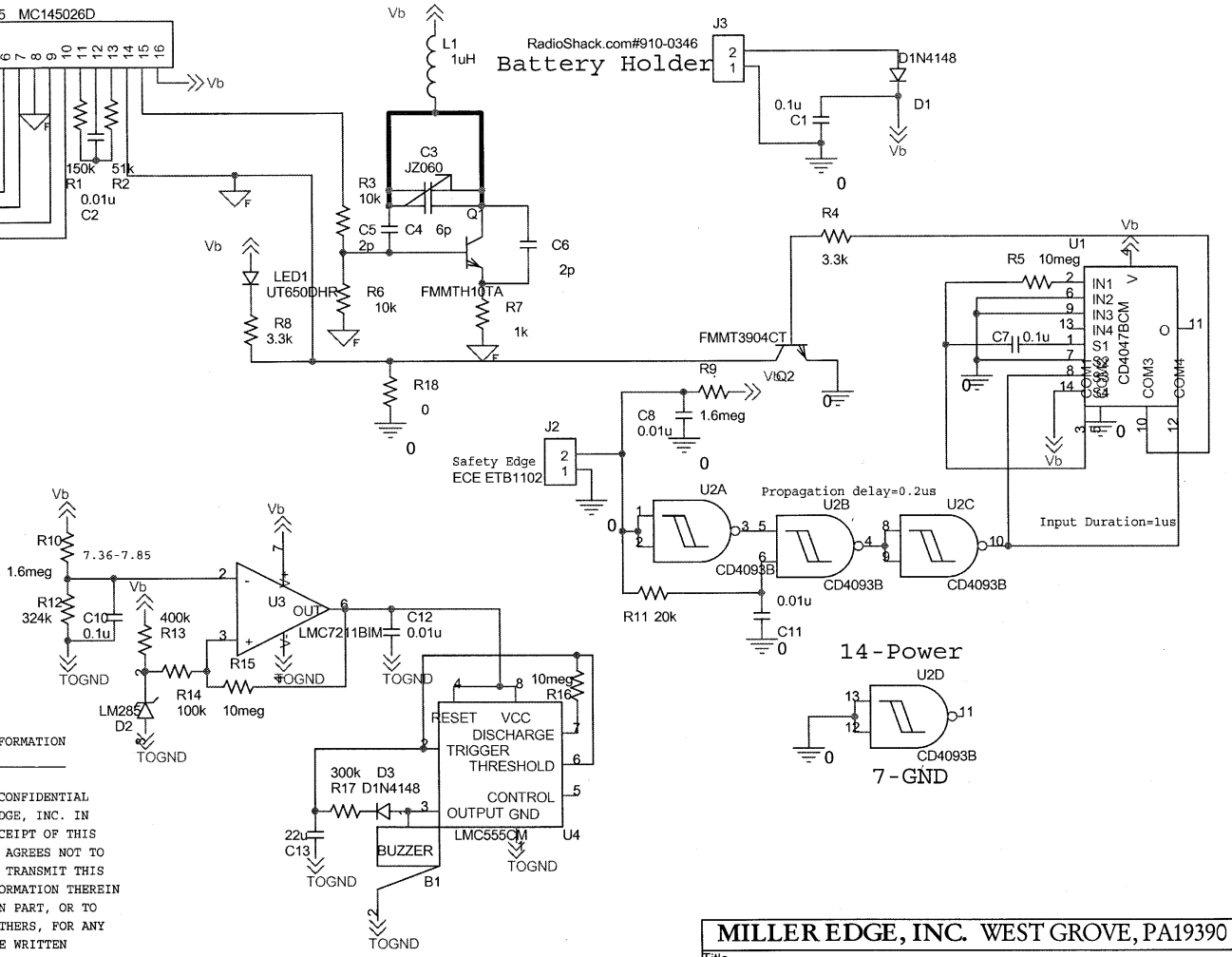

COMPANY CONFIDENTIAL INFORMATION

THIS DOCUMENT CONTAINS CONFIDENTIAL INFORMATION OF MILLER EDGE, INC. IN CONSIDERATION OF THE RECEIPT OF THIS DOCUMENT, THE RECIPIENT AGREES NOT TO REPRODUCE, COPY, USE OR TRANSMIT THIS DOCUMENT AND/OR THE INFORMATION THEREIN CONTAINED IN WHOLE OR IN PART, OR TO SUFFER SUCH ACTION BY OTHERS, FOR ANY PURPOSE, EXCEPT WITH THE WRITTEN PERMISSION, FIRST OBTAINED, OF MILLER EDGE, INC. AND FURTHER AGREES TO SURRENDER SAME TO MILLER EDGE, INC. WHEN THE REASON FOR ITS RECEIPT HAS TERMINATED.

MILLER EDGE, INC. WEST GROVE, PA19390

Title	me-rftx-a	
Size A	Document Number me-rftx-a	Rev A
Date: Friday, September 01, 2000	Sheet 2 of 2	