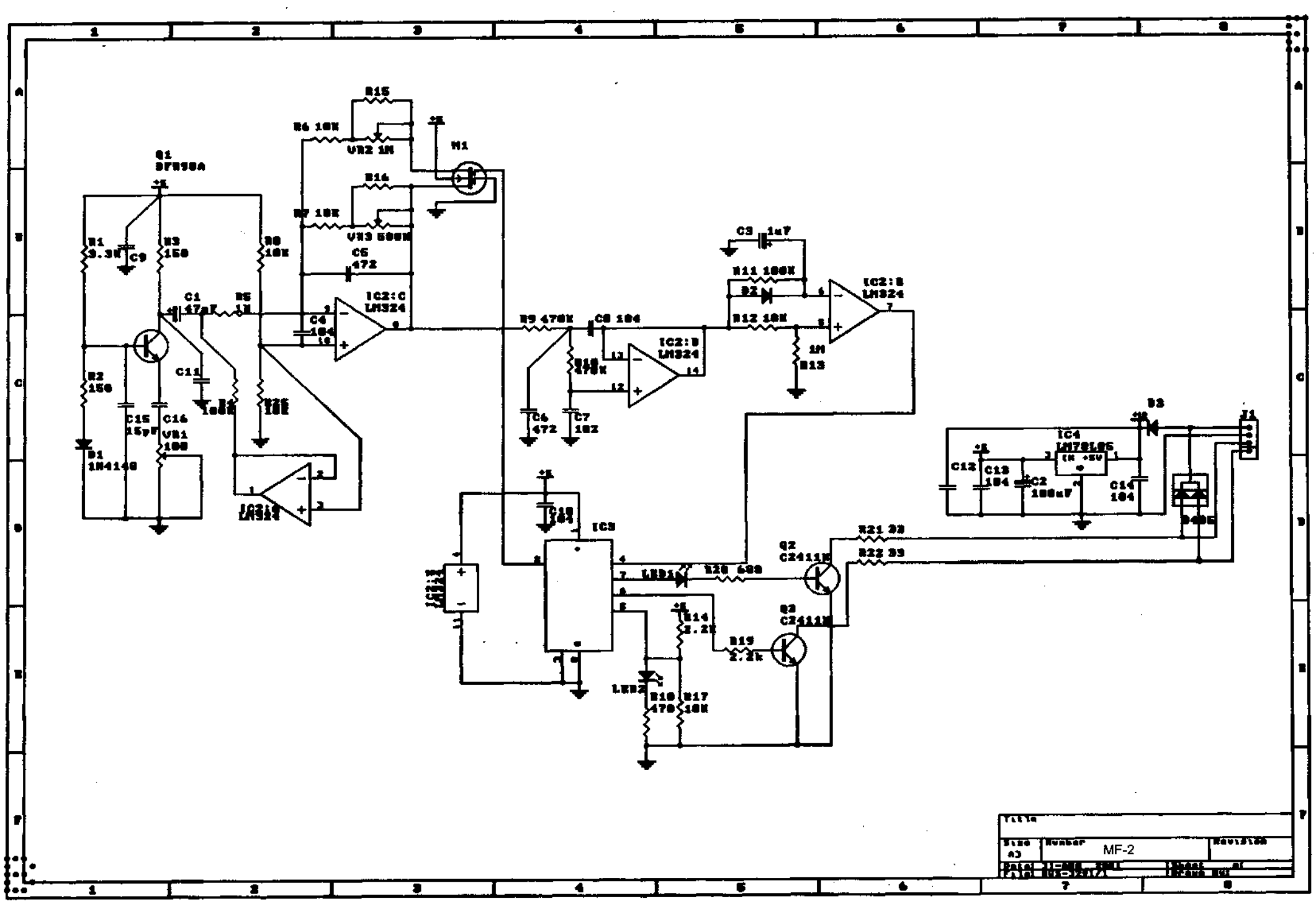
Q1
2N930A
R1
9.3K
C9
R3
150
R2
150
C15
15pF
C14
VR1
100
D1
1N4148
C1
47pF
R5
1K
C11
R6
10K
R4 10K
R15
VR2 1K
R14
R7 10K
VR3 500K
C5
472
C4
104
IC2:C
LM324
IC2:A
LM324
M1
R9 470K
C8 104
IC2:B
LM324
R10
470K
C6
472
C7
102
C3 1uF
R11 100K
D2
R12 10K
1M
R13
IC2:D
LM324
D3
IC4
LM78L05
IN +5V
C12
C13
104
C2
100uF
C14
104
J1
IC3
LED1
R20 680
Q2
C2411E
Q3
C2411E
R21 33
R22 33
R14
2.2k
R19
2.2k
LED2
R18
470
R17
10K
Title
Size
A3
Number
MF-2
Revision
Date
File
Sheet
of