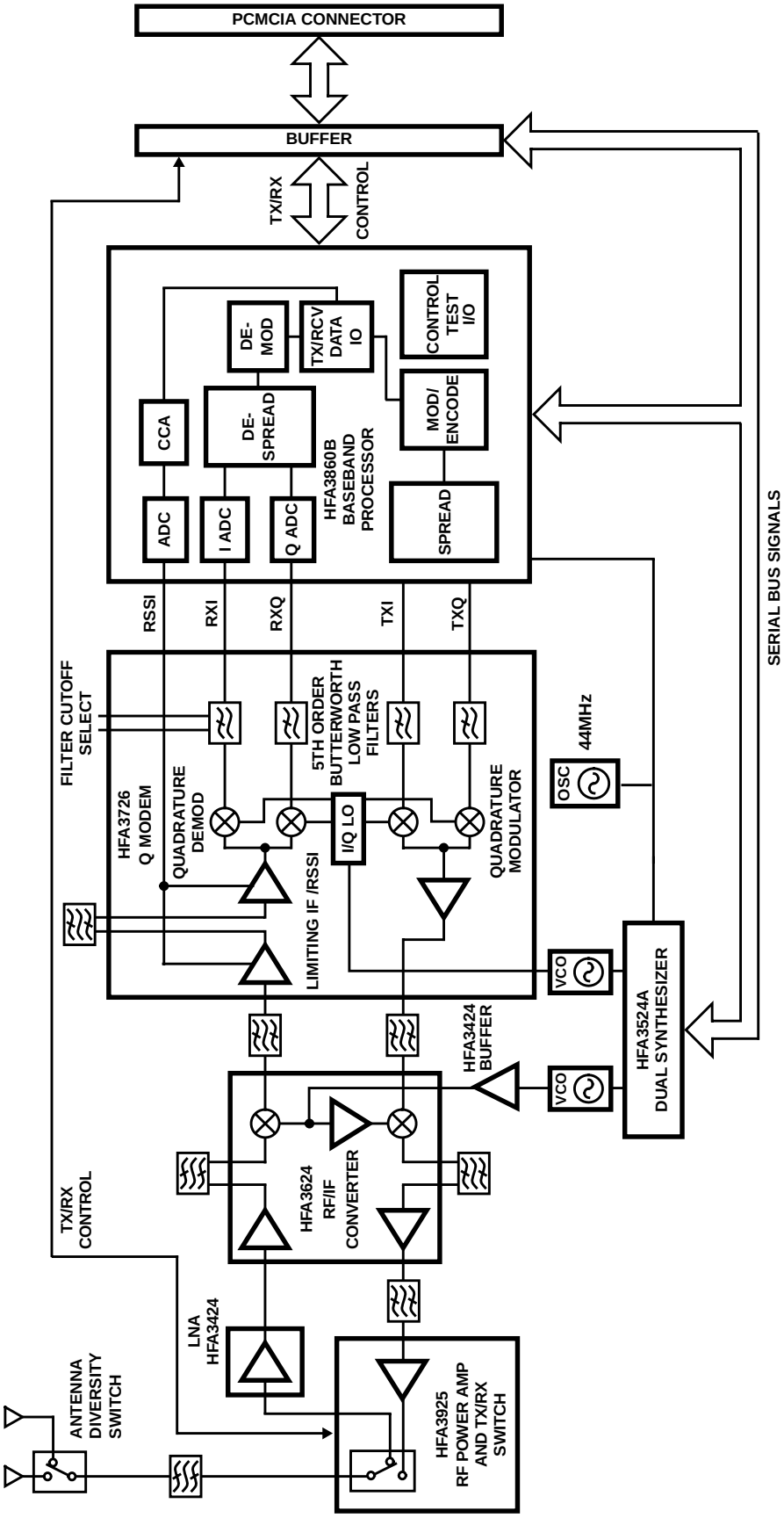HWB1141 Block Diagram