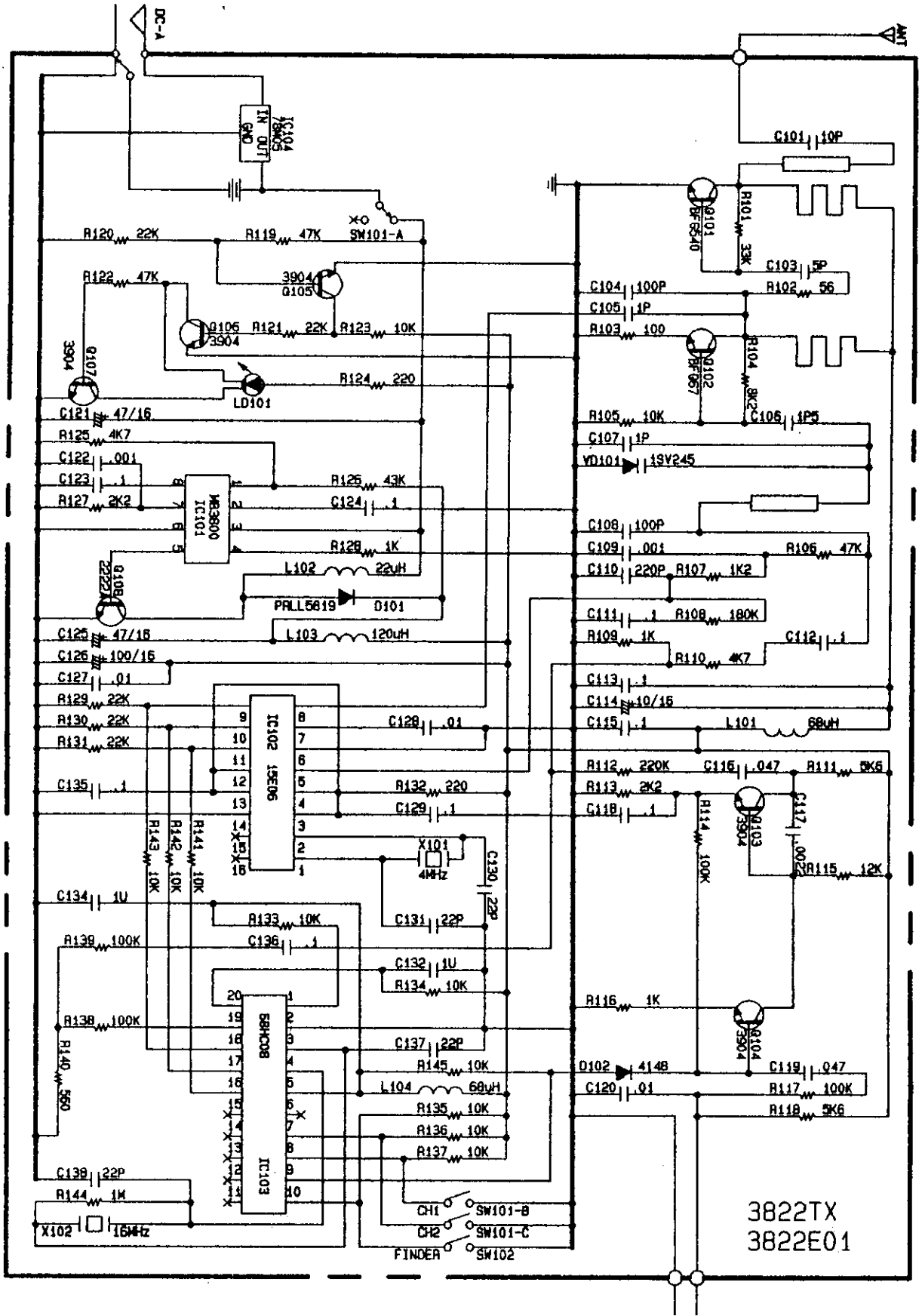
DC-A
ANT
IC104 78MC05
IN OUT GND
SW101-A
R120 22K
R119 47K
R122 47K
Q105 3904
Q106 3904
R121 22K
R123 10K
Q107 3904
LD101
R124 220
C121 47/16
R125 4K7
C122 .001
C123 .1
R127 2K2
IC101 MB3800
R126 43K
C124 .1
R128 1K
Q108 2222
L102 22uH
PRLL5819
D101
C125 47/16
L103 120uH
C126 100/16
C127 .01
R129 22K
R130 22K
R131 22K
IC102 15E06
C128 .01
C135 .1
R132 220
C129 .1
X101 4MHz
C130 22P
R143 10K
R142 10K
R141 10K
C134 1U
R133 10K
C131 22P
R139 100K
C136 .1
C132 1U
R134 10K
R138 100K
R140 560
IC103 58HC08
C137 22P
R145 10K
L104 68uH
R135 10K
R136 10K
R137 10K
C138 22P
R144 1M
X102 16MHz
CH1 SW101-B
CH2 SW101-C
FINDER SW102
C101 10P
Q101 BF5540
R101 33K
C103 5P
C104 100P
R102 56
C105 1P
R103 100
Q102 BF967
R104 8K2
C106 1P5
R105 10K
C107 1P
VD101 1SV245
C108 100P
C109 .001
R106 47K
C110 220P
R107 1K2
C111 .1
R108 180K
R109 1K
C112 .1
R110 4K7
C113 .1
C114 10/16
C115 .1
L101 68uH
R112 220K
C116 .047
R111 5K6
R113 2K2
C118 .1
Q103 3904
C117 .002
R114 100K
R115 12K
R116 1K
Q104 3904
D102 4148
C119 .047
C120 .01
R117 100K
R118 5K6
3822TX
3822E01