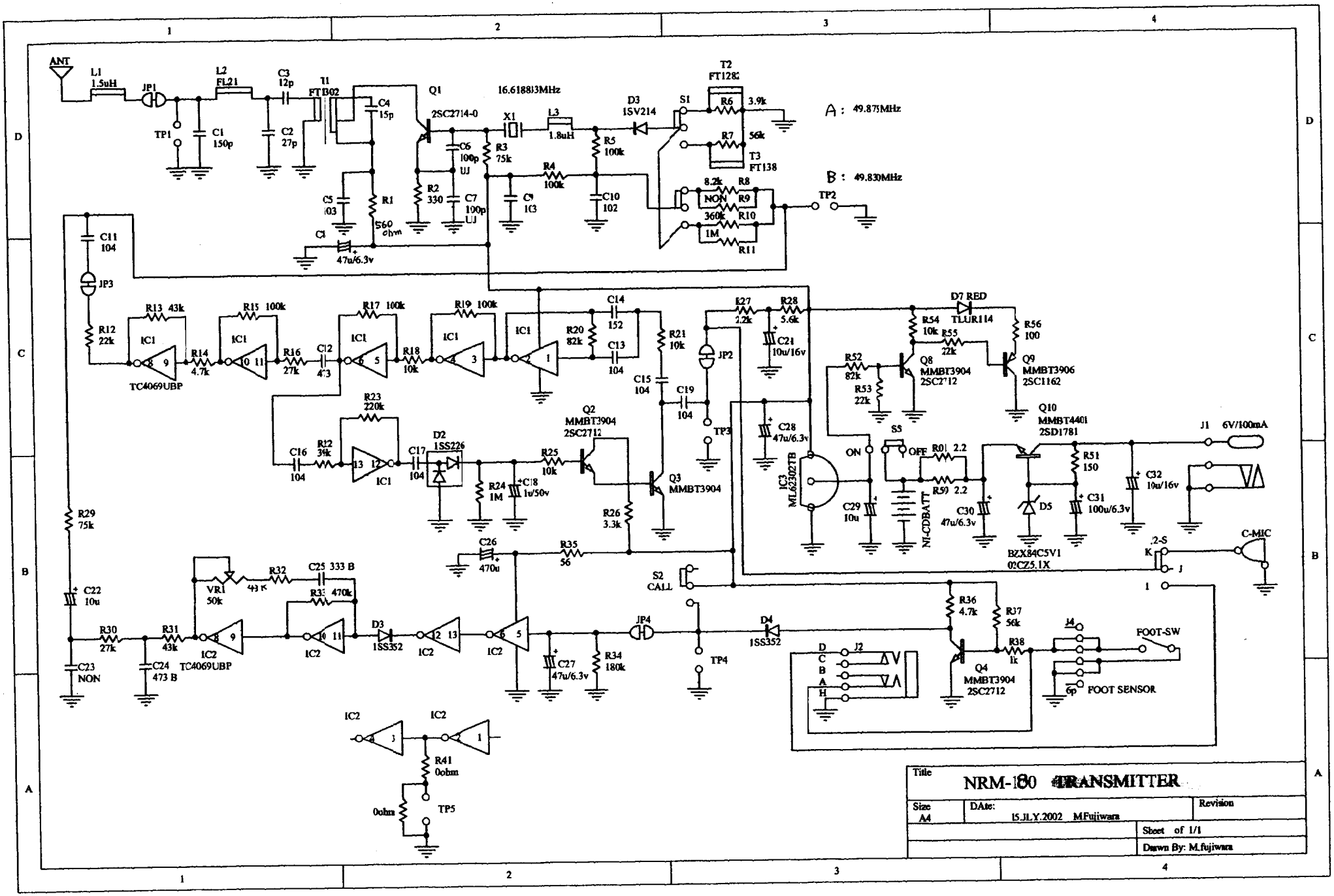
ANT
L1 1.5uH
JP1
L2 FL21
C3 12p
T1 FTB02
C4 15p
Q1 2SC2714-0
16.618813MHz
X1
L3 1.8uH
D3 1SV214
S1
T2 FT128
T3 FT138
A : 49.875MHz
B : 49.830MHz
TP1
C1 150p
C2 27p
C6 100p UJ
R3 75k
R5 100k
R6 3.9k
R7 56k
R4 100k
C5 103
R1 560 ohm
R2 330
C7 100p UJ
C9 103
C10 102
R8 8.2k
R9 NON
R10 360k
R11 1M
TP2
C8 47u/6.3v
C11 104
JP3
R12 22k
R13 43k
R15 100k
R17 100k
R19 100k
IC1
TC4069UBP
R14 4.7k
R16 27k
C12 473
R18 10k
R20 82k
C14 152
C13 104
R21 10k
C15 104
C19 104
JP2
TP3
R27 2.2k
R28 5.6k
C21 10u/16v
D7 RED TLUR114
R54 10k
R55 22k
R56 100
R52 82k
R53 22k
Q8 MMBT3904 2SC2712
Q9 MMBT3906 2SC1162
Q10 MMBT4401 2SD1781
R23 220k
C16 104
R22 39k
C17 104
D2 1SS226
R24 1M
C18 1u/50v
R25 10k
Q2 MMBT3904 2SC2712
Q3 MMBT3904
R26 3.3k
C28 47u/6.3v
IC3 ML62302TB
S5
ON
OFF
R01 2.2
R50 2.2
NI-CDBATT
C29 10u
C30 47u/6.3v
D5 BZX84C5V1 02CZ5.1X
R51 150
C31 100u/6.3v
C32 10u/16v
J1 6V/100mA
C-MIC
R29 75k
C26 470u
R35 56
S2 CALL
C22 10u
R30 27k
R31 43k
C23 NON
C24 473 B
VR1 50k
R32 43k
C25 333 B
R33 470k
IC2 TC4069UBP
D3 1SS352
C27 47u/6.3v
R34 180k
JP4
TP4
D4 1SS352
R36 4.7k
R37 56k
R38 1k
Q4 MMBT3904 2SC2712
J2
J4
FOOT-SW
FOOT SENSOR
R41 0ohm
0ohm
TP5
Title
NRM-180 TRANSMITTER
Size A4
DAte: 15.JLY.2002 M.Fujiwara
Revision
Sheet of 1/1
Dawn By: M.fujiwara