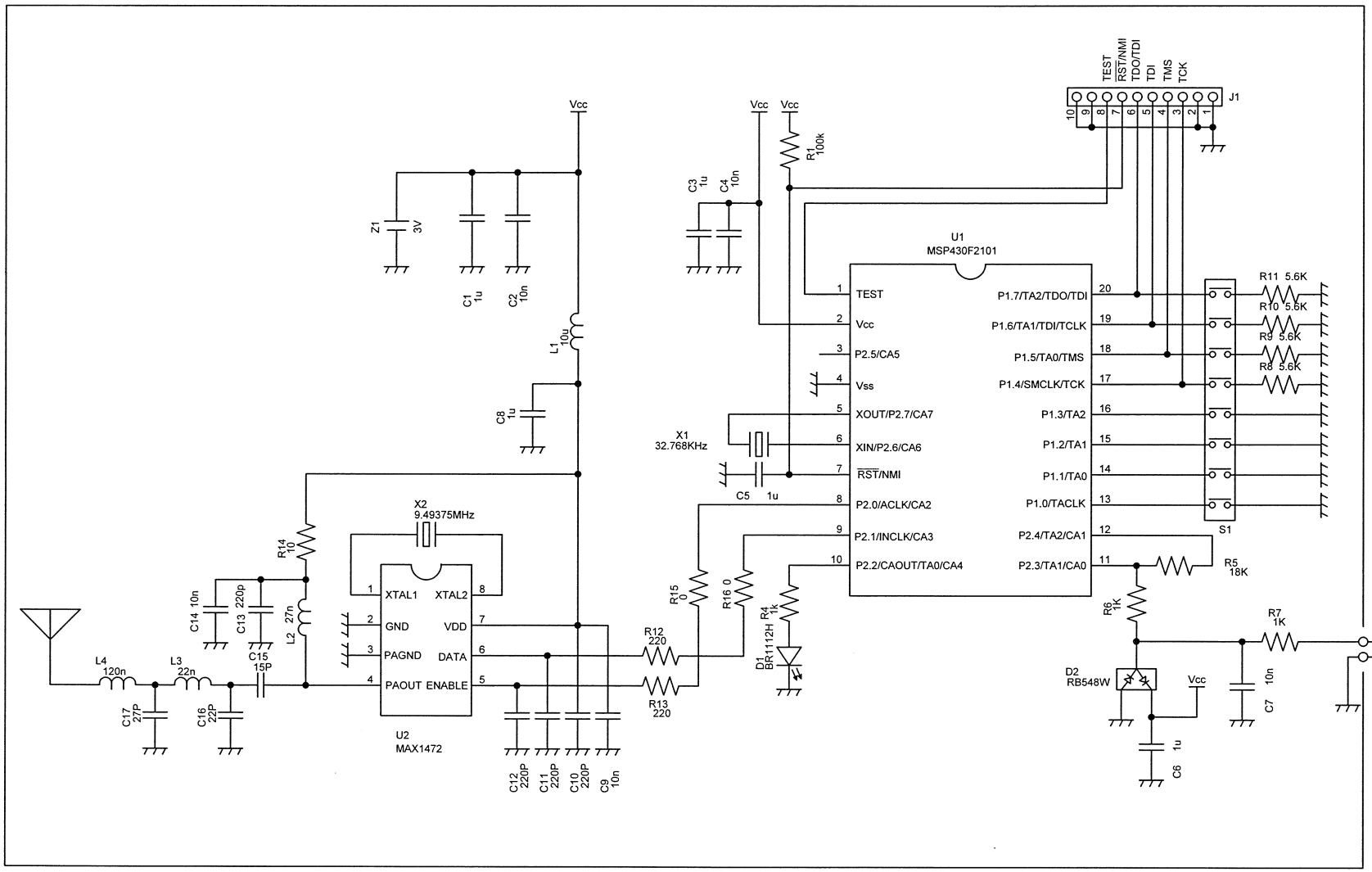

TITLE	DRAWING_No.		
	NC-100TXC(Posey)		
SHEET	DATE	DESIGN	EXCEL
1 / 1	4,Sep,'07	Y.Suzuki	