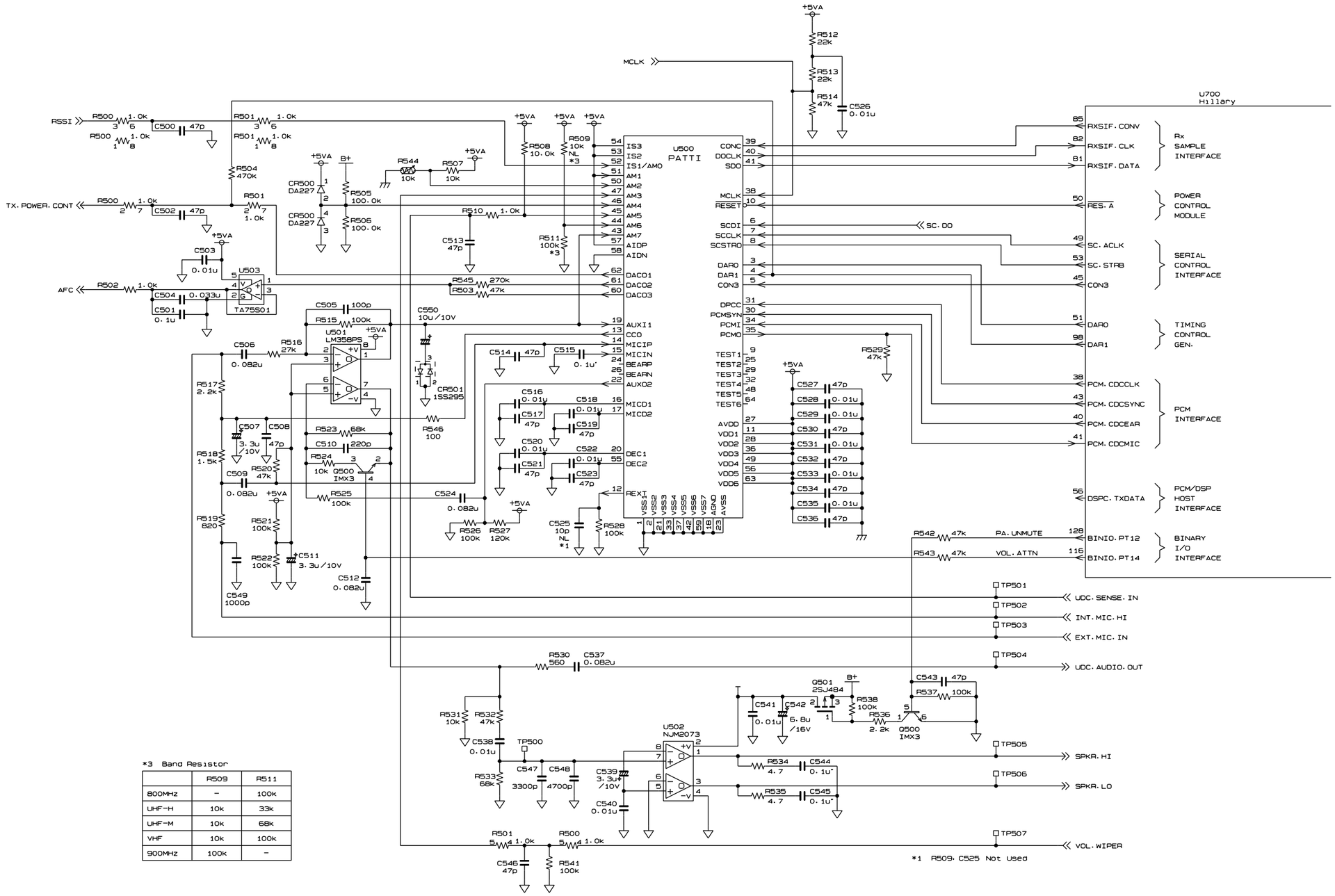

*3 Band Resistor

	R509	R511
800MHz	–	100k
UHF-H	10k	33k
UHF-M	10k	68k
VHF	10k	100k
900MHz	100k	–

Jaguar 700P 900M MAin Logic Block Schematic Diagram(2/6)

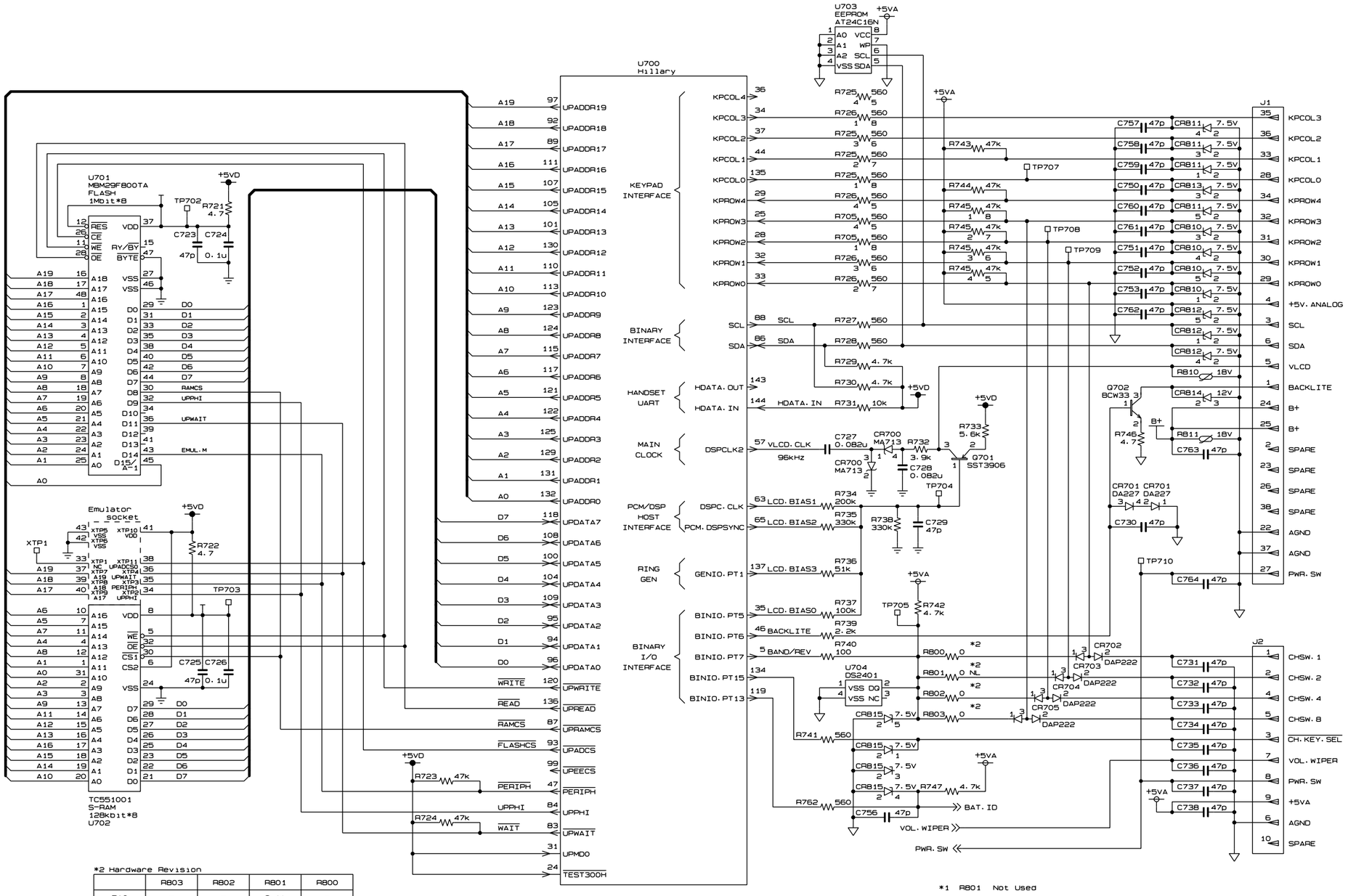

*2 Hardware Revision

	R803	R802	R801	R800
RA0	–	–	Omit	–
RA1	–	Omit	Omit	–
RA2	Omit	–	Omit	–
RA3	Omit	Omit	Omit	–

Jaguar 700P 900M MAin Logic Block Schematic Diagram(4/6)