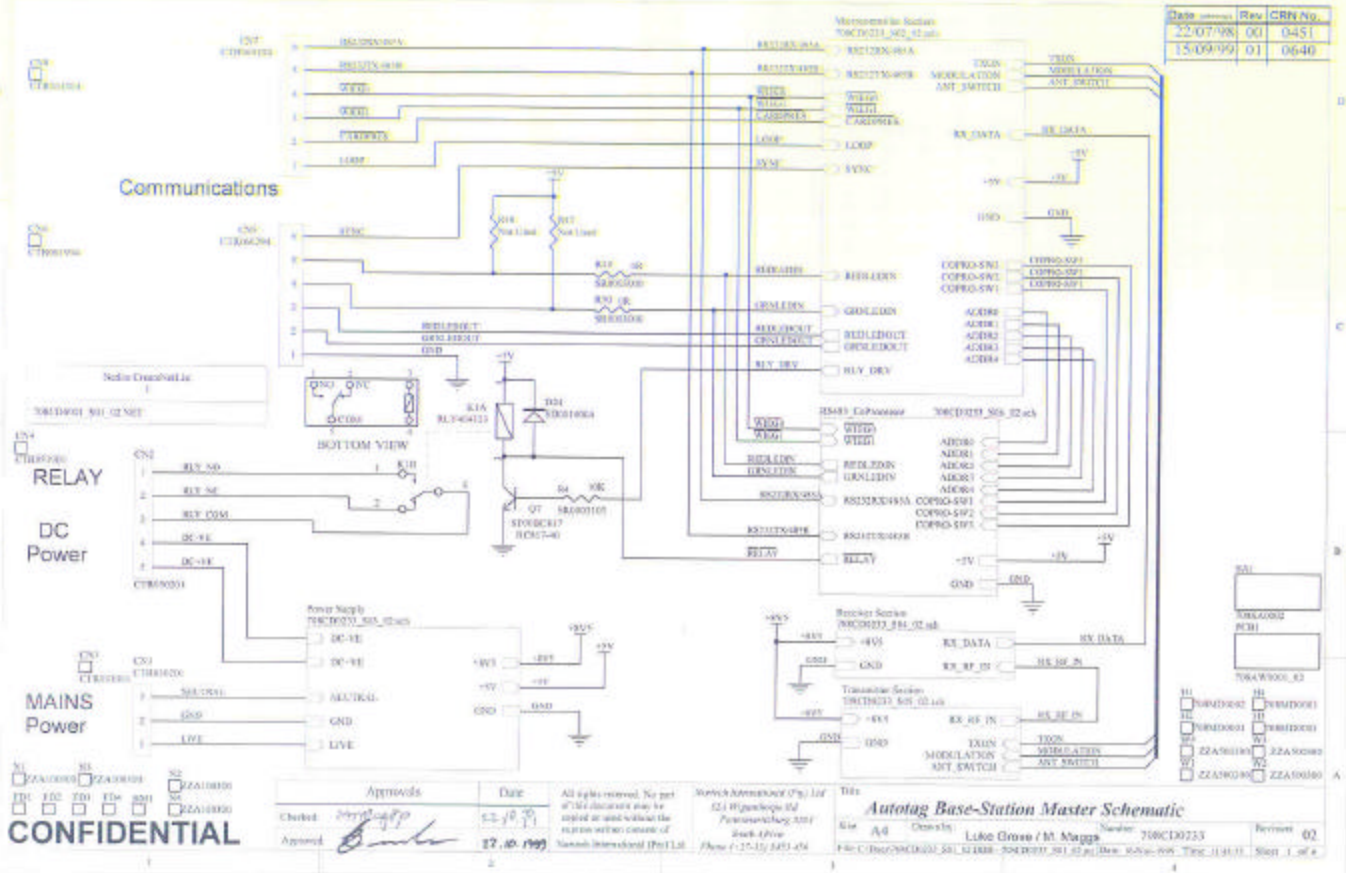
Communications
RELAY
DC
Power
MAINS
Power
BOTTOM VIEW
Autotag Base-Station Master Schematic
CONFIDENTIAL

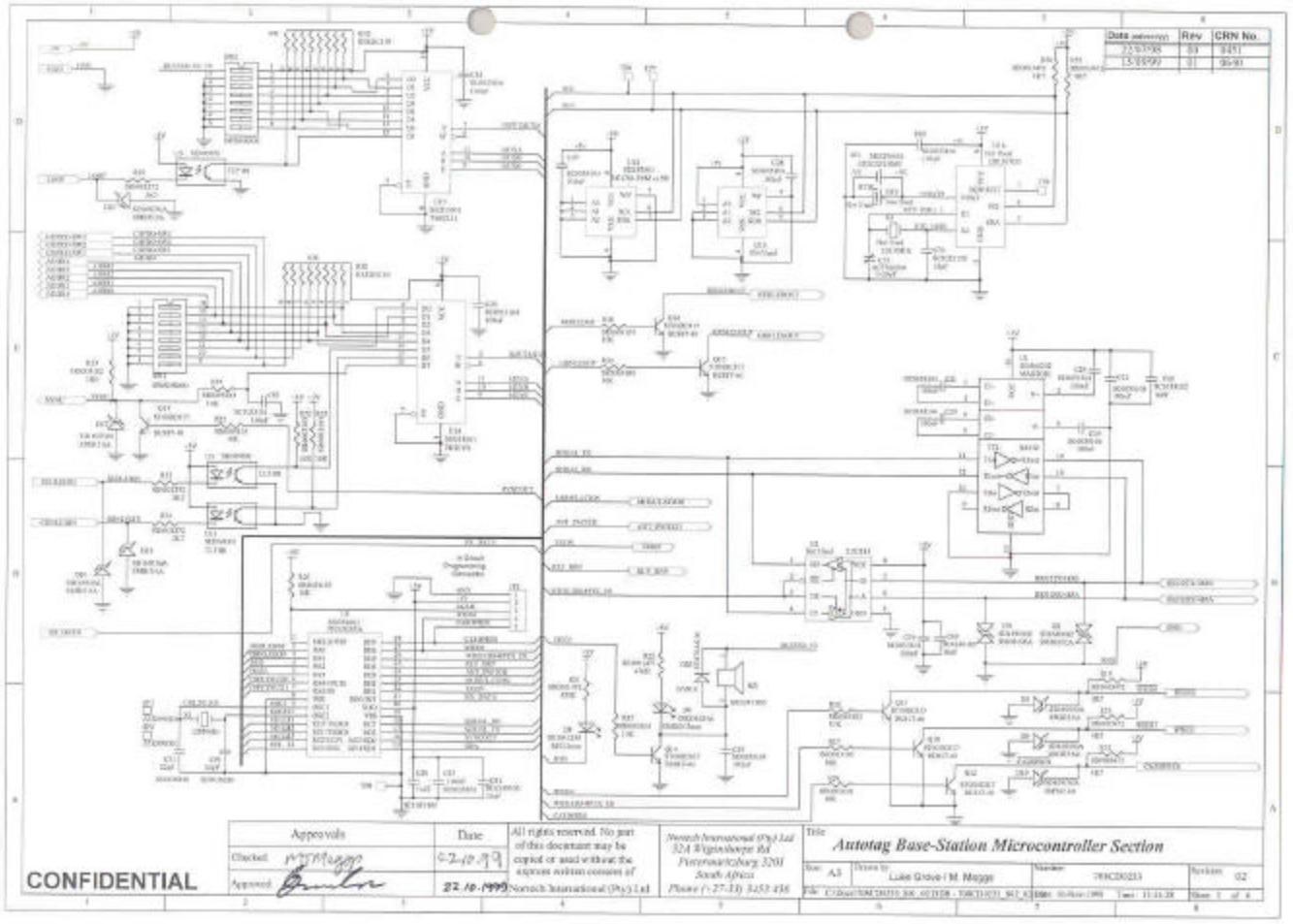
Date
Rev
CRN No.
Approvals
Date
Checked
Approved
22.10.1999
Nonch International (Pty) Ltd
All rights reserved. No part of this document may be copied or used without the express written consent of
Nonch International (Pty) Ltd
324 Wiganstowne Rd
Pietermaritzburg 3201
South Africa
Phone (+27-33) 3453 436
Title
Autotag Base-Station Microcontroller Section
Size A3
Drawn by
Luke Grove / M. Maggs
Number
Revision
02
CONFIDENTIAL

Date	Rev	CRN No.
22/07/98	00	0451
15/09/99	01	0640

VALUES IN ( ) ARE THE VALUES FROM MITEL's DATA SHEET
VALUES IN [ ] ARE THE VALUES FROM MITEL's REFRENCE DESIGN

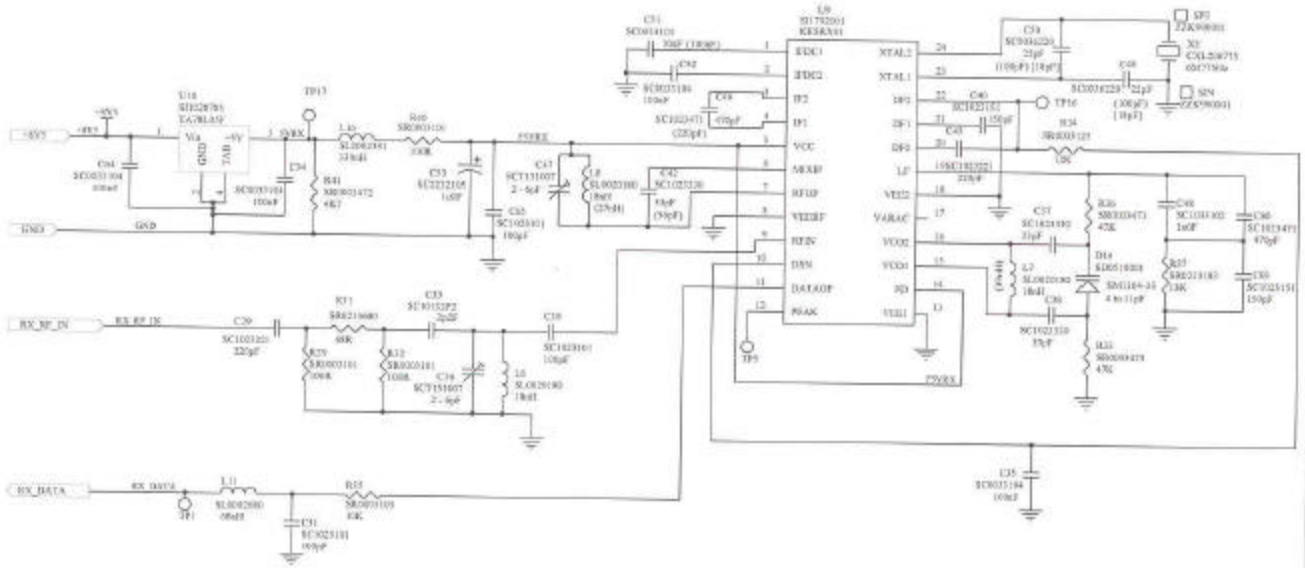

CONFIDENTIAL

Approvals	Date
Checked:	22.10.99
Approved:	22.10.99

All rights reserved. No part of this document may be copied or used without the express written consent of Nortech International (Pty) Ltd.

Nortech International (Pty) Ltd
35A Pigeonhoop Rd
Pietermaritzburg 3201
South Africa
Phone (+27-33) 3423 454

Title: *Autotag Base-Station Receiver Section*

Size: A4 | Drawn by: Luke Grove / M. Meggs | Number: 709CD0233 | Revision: 02

File: C:\Dual\NC\D0233_501_02.DSB - 709CD0233_501_02.sch | Date: 16-Nov-1999 | Time: 11:14:42 | Sheet 4 of 6

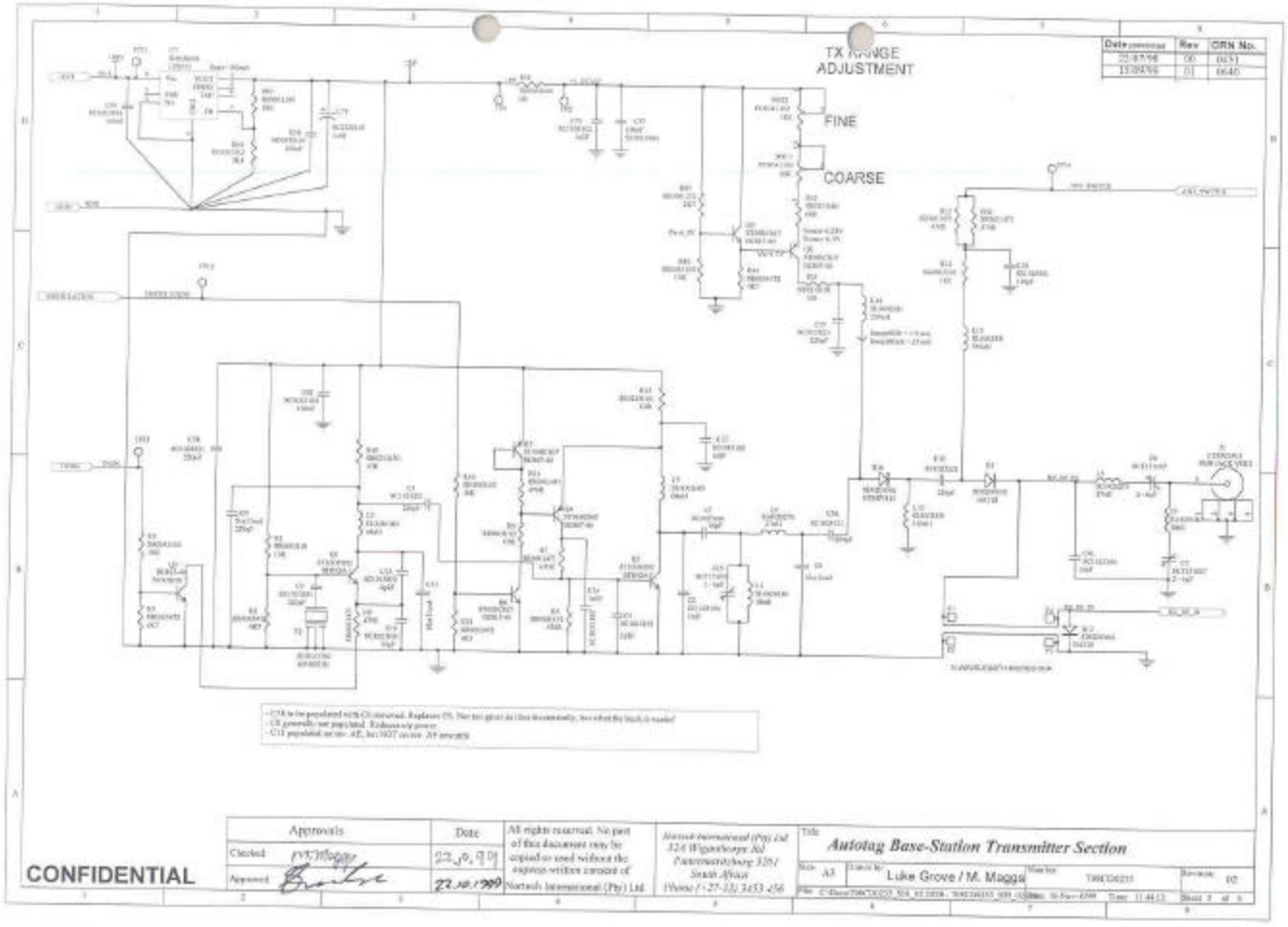
TX RANGE ADJUSTMENT
FINE
COARSE
Date
Rev
ORN No.
Approvals
Checked
Approved
Date
All rights reserved. No part of this document may be copied or used without the express written consent of Nortrak International (Pty) Ltd.
Nortrak International (Pty) Ltd
324 Wigandsvlei Rd
Pietermaritzburg 3201
South Africa
Phone (+27-33) 3453 456
Title
Autotag Base-Station Transmitter Section
Size A3
Drawn by Luke Grove / M. Maggs
Sheet No TBSCD0231
Revision 02
Sheet 3 of 6
CONFIDENTIAL

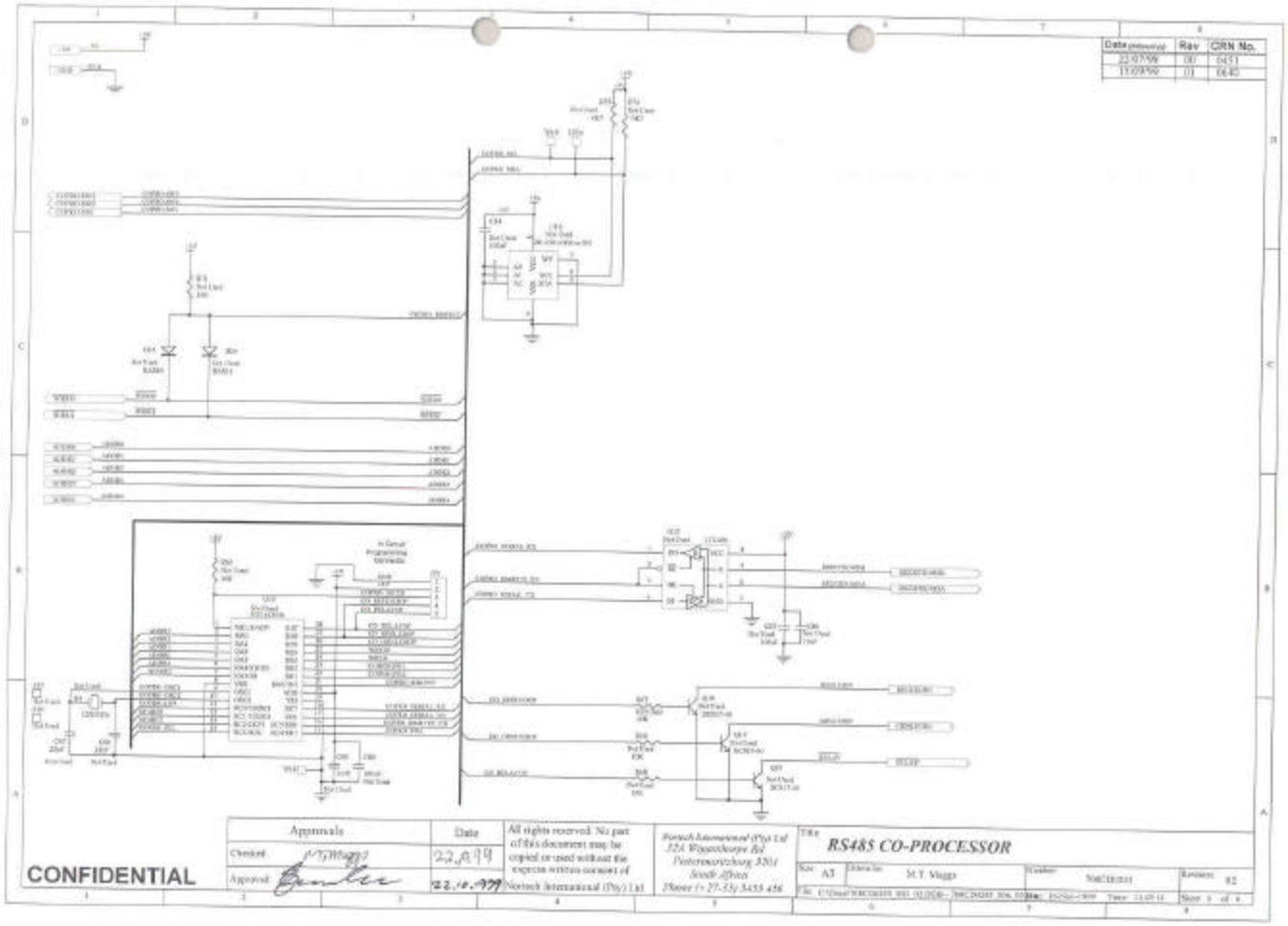
Date
Rev
CRN No.
RS485 CO-PROCESSOR
CONFIDENTIAL
Approvals
Date
All rights reserved. No part of this document may be copied or used without the express written consent of Nortech International (Pty) Ltd
M.T. Viggo
A3

Date	Rev	CRN No.
22/07/98	00	0451
15/09/99	01	0640

VALUES IN ( ) ARE THE VALUES FROM MITEL's DATA SHEET
VALUES IN [ ] ARE THE VALUES FROM MITEL's REFRENCE DESIGN

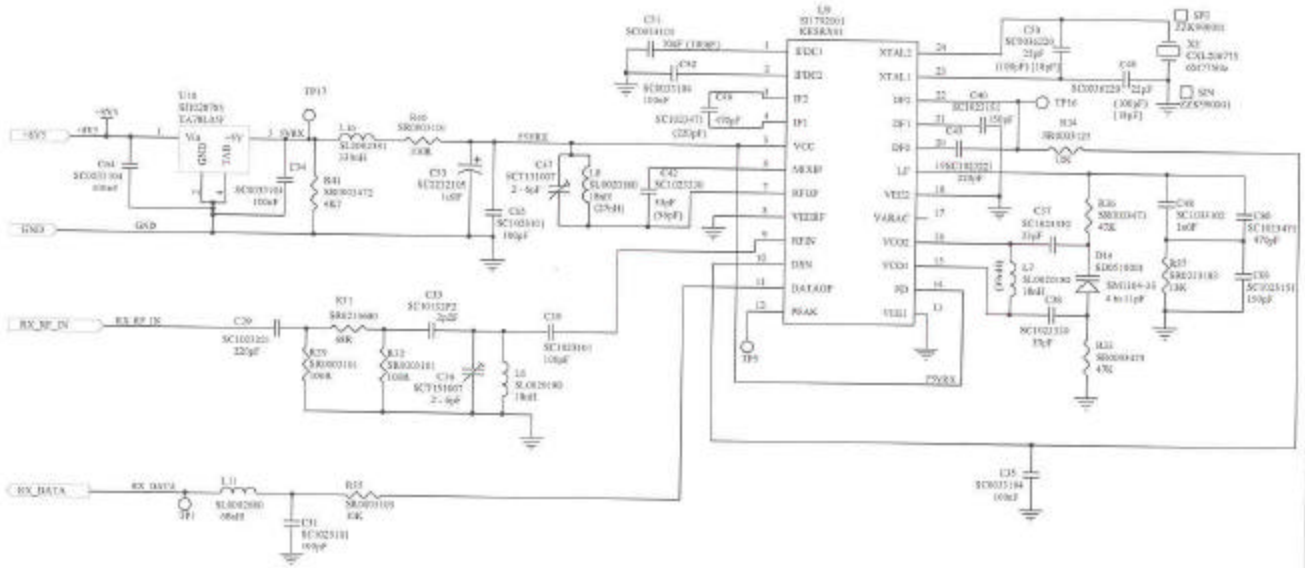

CONFIDENTIAL

Approvals	Date
Checked:	22.10.99
Approved:	22.10.99

All rights reserved. No part of this document may be copied or used without the express written consent of Nortech International (Pty) Ltd.

Nortech International (Pty) Ltd
35A Pigeonhoop Rd
Pietermaritzburg 3201
South Africa
Phone (+27-33) 3423 454

Title: *Autotag Base-Station Receiver Section*

Size: A4 | Drawn by: Luke Grove / M. Meggs | Number: 709CD0233 | Revision: 02

File: C:\Dual\NC\D0233_501_02.DSB - 709CD0233_501_02.sch | Date: 16-Nov-1999 | Time: 11:14:42 | Sheet 4 of 6

C9
C36
C47
HIGH VOLTAGE
DANGER !!
115-230 V AC

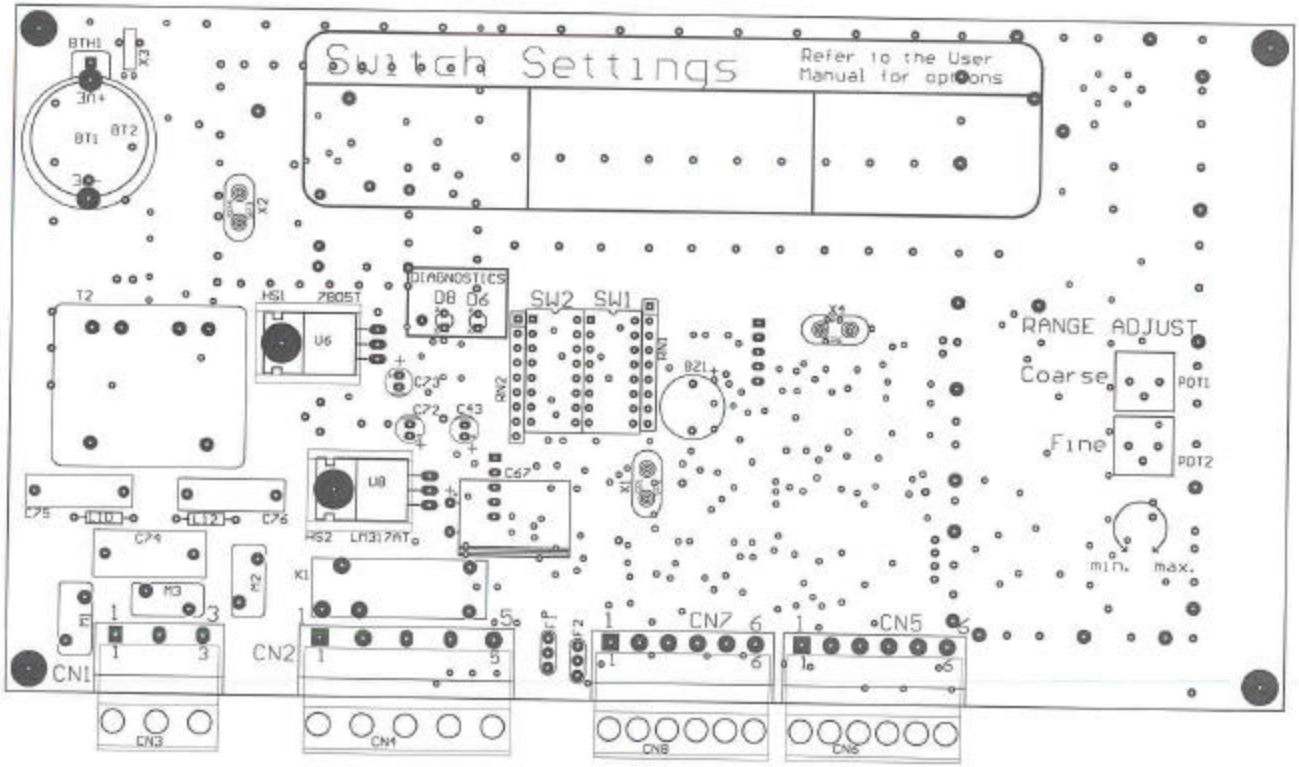
Switch Settings
Refer to the User Manual for options
BTH1
BT1
BT2
X3
X2
T2
HS1
7805T
U6
DIAGNOSTICS
D8 D6
SW2 SW1
X4
RANGE ADJUST
Coarse
POT1
Fine
POT2
C73
C72
C43
C67
BZ1
X1
C75
L11
L12
C76
C74
U8
HS2
LM317AT
M3
M2
K1
CN1
CN2
CN7
CN5
CN3
CN4
CN8
CN6
min.
max.

NORTECH
7084M0001 Rev 02 LEADED COMP LAYER

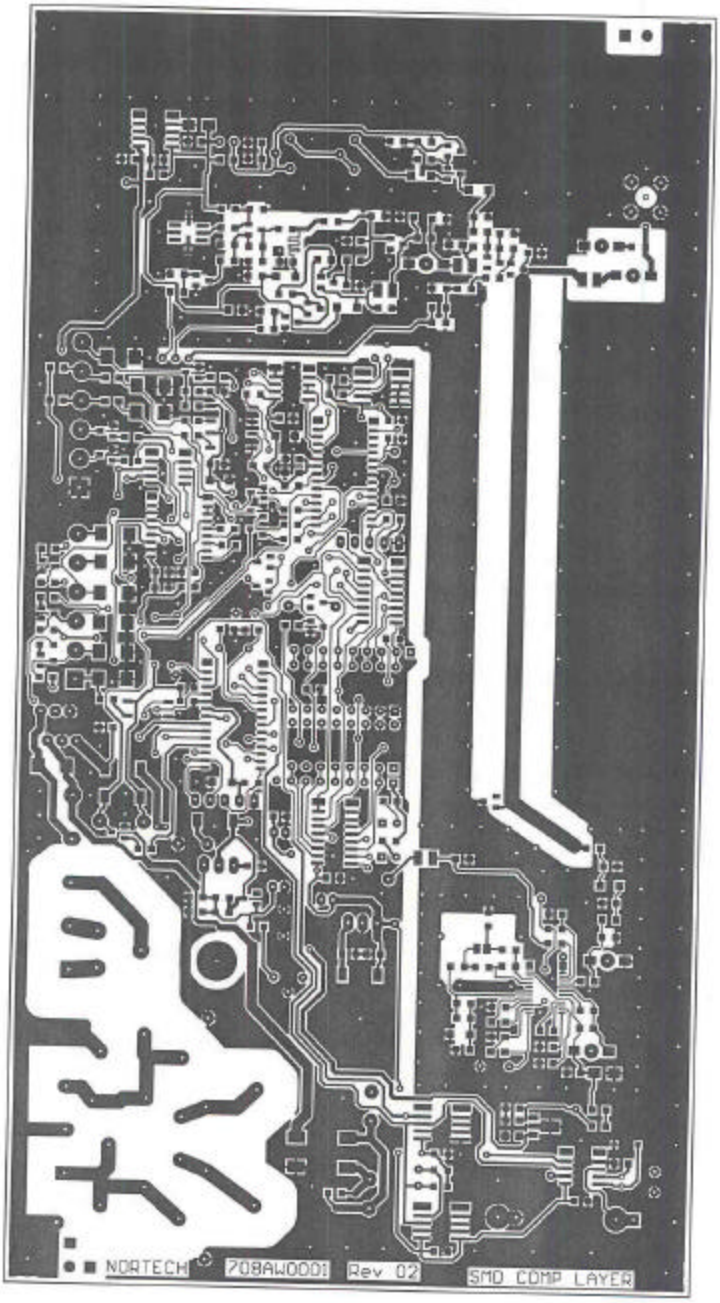
NORTECH
708AW0001
Rev 02
SMD COMP LAYER