LX SERIES AMPLIFIER LINE UP

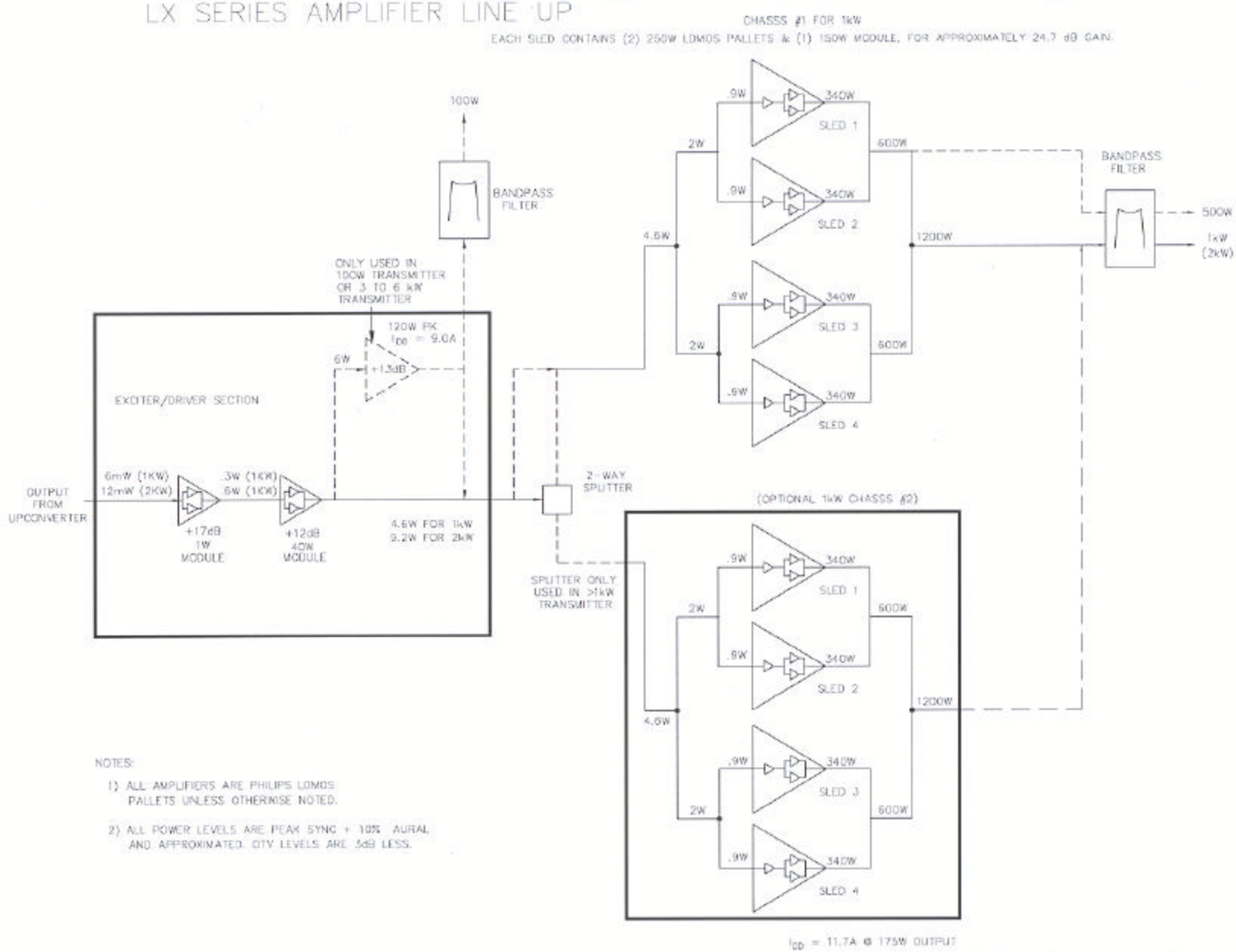

NOTES:

1) ALL AMPLIFIERS ARE PHILIPS LDMOS PALLETS UNLESS OTHERWISE NOTED.

2) ALL POWER LEVELS ARE PEAK SYNC + 10% AURAL AND APPROXIMATED. QTY LEVELS ARE 3dB LESS.

REV	ECO	DATE	APV
B0	20111443	7/7/04	LRT

MADE CORRECTIONS TO THE POWER LEVELS. (RGE)

Axcera.

THIS PRINT IS THE PROPERTY OF AXCERA, IT SHALL NOT BE COPIED WITHOUT PERMISSION.

MATERIAL — — — —

FINISH — — — —

TITLE B/D, LX SERIES AMPLIFIER LINE UP, 100W – 2 KW

DWN	CDD	1/9/03	DWG. NO. 1302633	REV B0
CHK	LRT	01/19/04		
REL	LRT	01/19/04	C SCALE – –	SHEET 1 OF 1

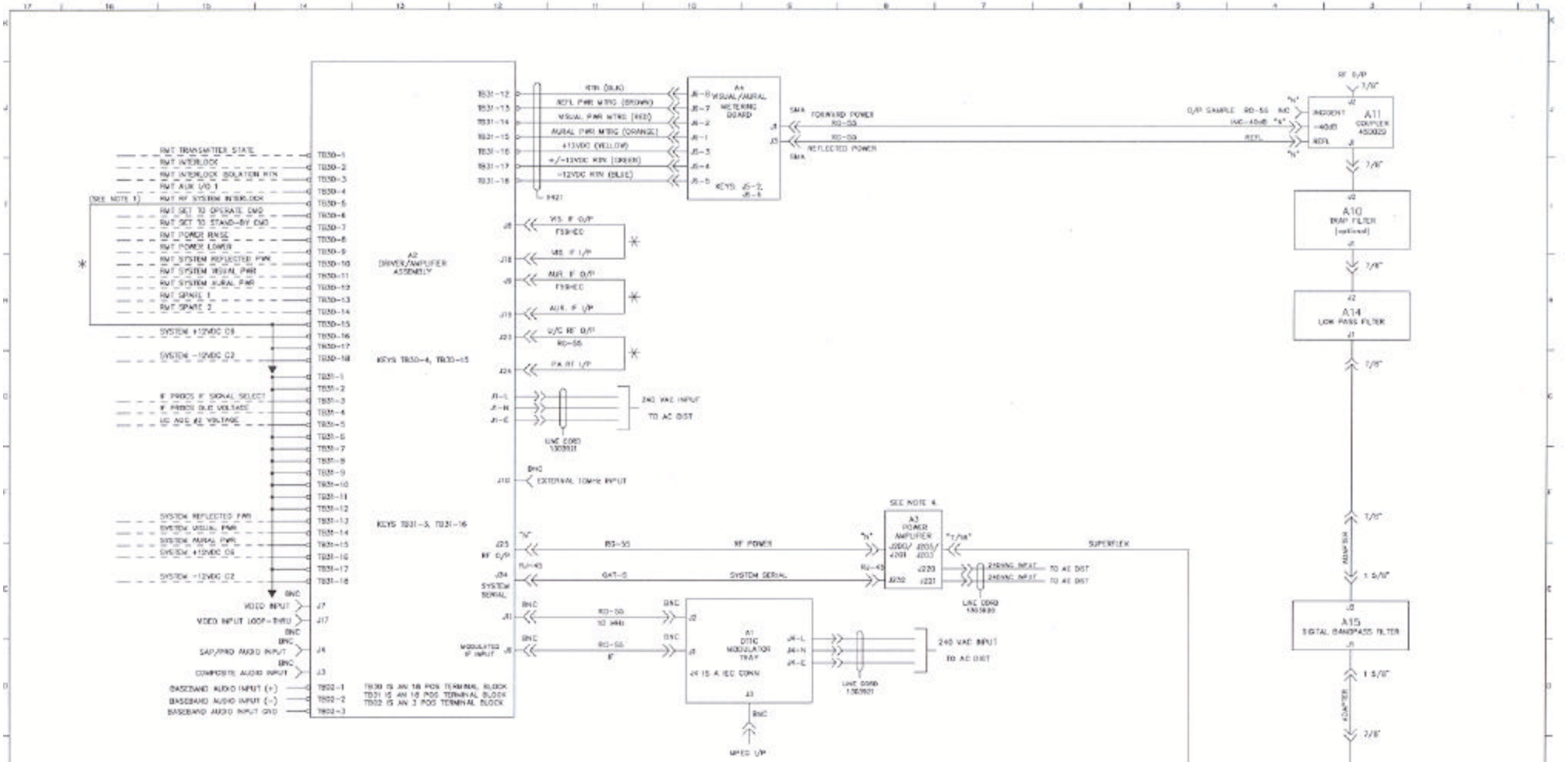

NOTES:

1) WIRE JUMPER FROM TB30-5 TO TB30-15 MUST BE INSTALLED TO PUT THE TRANSMITTER IN THE OPERATE MODE.
2) * DENOTES CABLE/WIRE IS PART OF TRANSMITTER ASSY.
3) ALL WIRES ARE 22AWG UNLESS OTHERWISE NOTED.
4) ON 125W UNIT, RF I/P IS ON J201 AND RF O/P IS ON J203. ON 125W & 250W UNIT, J221 IS NOT USED.

REV	ECO	DATE	APV
	ADDED J201 & J202 TO A3. ADDED NOTE 4.		JCM
00	28196	7/9/05	JCM
	CHANGED KEYS ON A2: WAS TB30-1, TB30-10, TB31-2, TB31-17.		RT
00	28196	8/15/06	URT

Axcera.

THIS PRINT IS THE PROPERTY OF AXCERA. IT SHALL NOT BE COPIED WITHOUT PERMISSION.

MATERIAL ------

FINISH ------

TITLE I/C, SYSTEM 125W/250W/500W TRANSMITTER INNOVATOR LX

DWN RGC 8/21/06

CHK JCM 8/21/06

ISS JCM 8/21/06

DWG NO. 1303940

REV 00

D SCALE 1=1 SHEET 1 OF 1

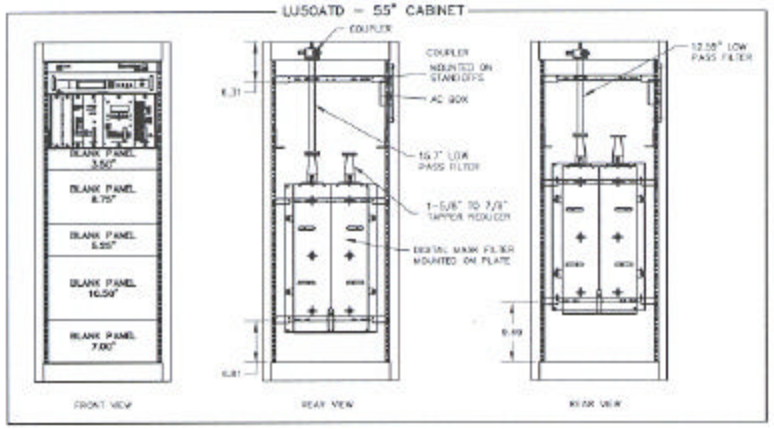

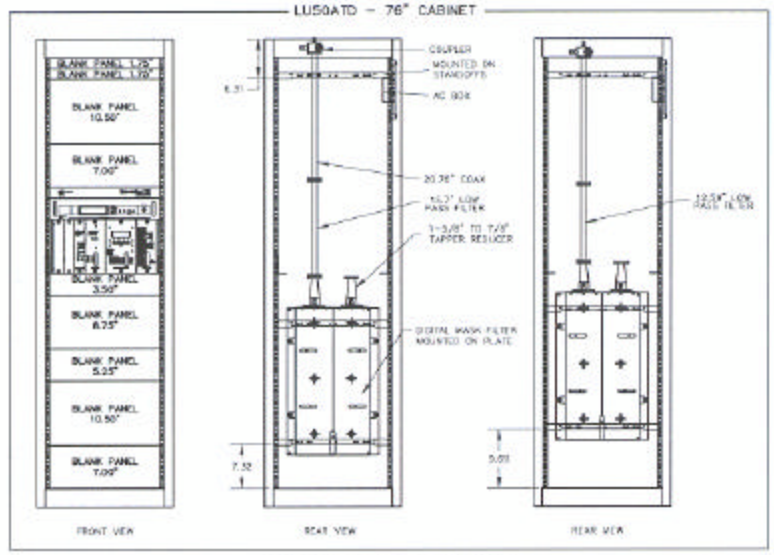

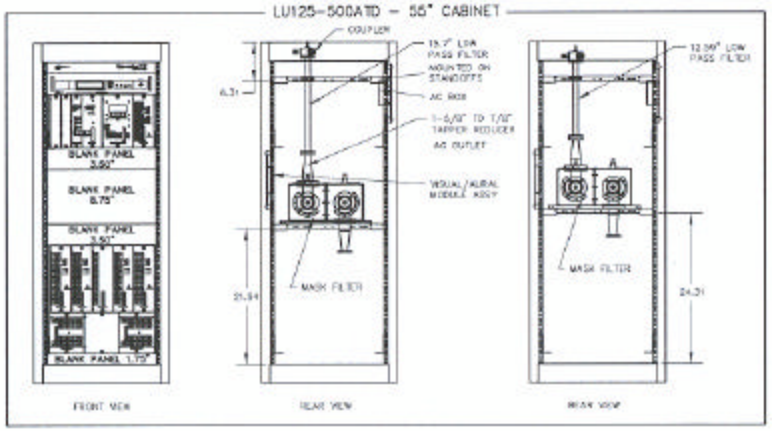

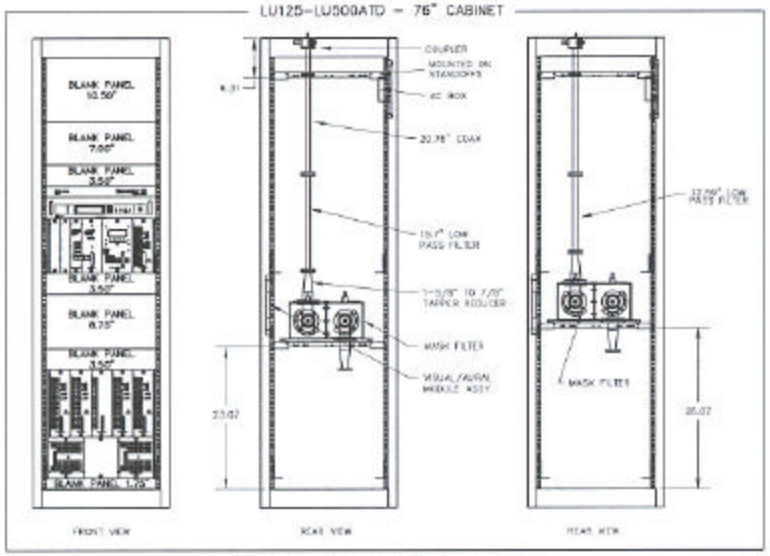

REV	ECO	DATE	APV

Axcera.

THIS PRINT IS THE PROPERTY OF AXCERA, IT SHALL NOT BE COPIED WITHOUT PERMISSION.

MATERIAL ——

FINISH ——

TITLE RACKING PLAN
INN, DIGITAL LX 50W–1000W
TYPICAL CONFIGURATION

DWN	RT	01/28/00	DWG NO	REV
CHK	RT	01/28/00	1303596	GD
ISS.	RT	01/28/00	SCALE	SHEET 1 OF 2

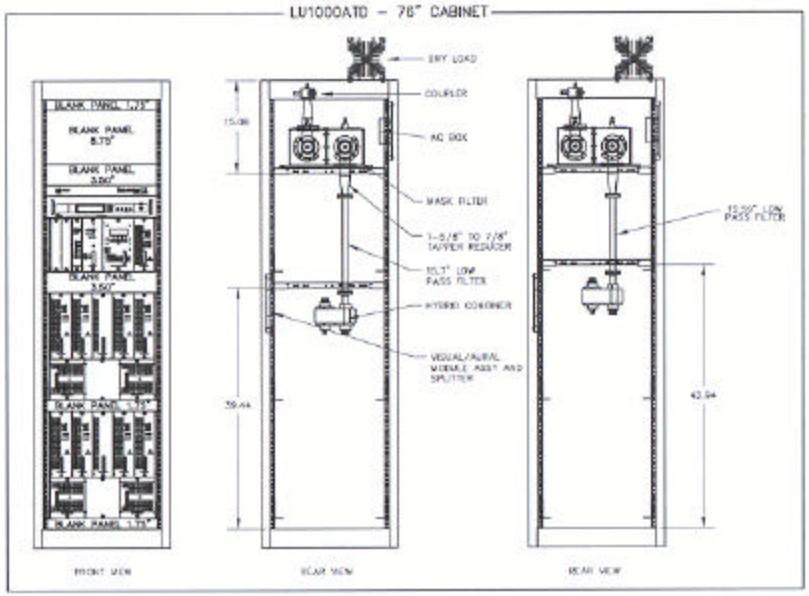

Axcera.

THIS PRINT IS THE PROPERTY OF AXCERA, IT SHALL NOT BE COPIED WITHOUT PERMISSION

MATERIAL

FINISH

REV	CCO	DATE	APV

TITLE RACKING PLAN
INN. DIGITAL LX 50W-1000W
TYPICAL CONFIGURATION

DWN	RT	11/20/03	DWG. NO. 1303596	REV G0
CHK	RT	11/20/03		
APP	RT	11/20/03	SCALE	SHEET 2 OF 2

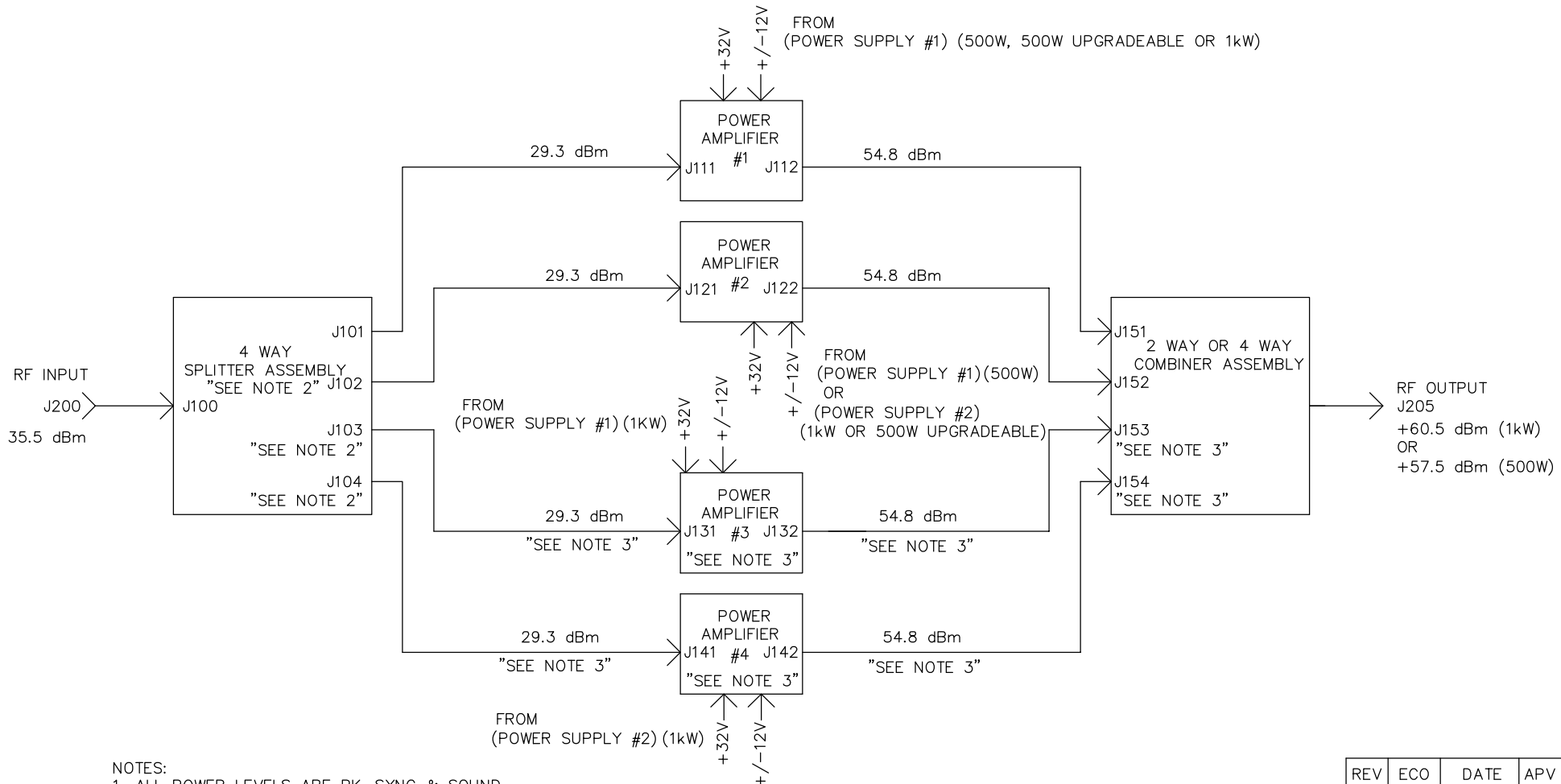

NOTES:
1. ALL POWER LEVELS ARE PK-SYNC & SOUND. FOR DTV OPERATION SUBTRACT +3dB.
2. IN 500 WATT POWER AMPLIFIER ASSEMBLIES, THE JACKS NOTED ARE TERMINATED WITH 50 OHMS.
3. NOT PRESENT IN 500 WATT POWER AMPLIFIER ASSEMBLIES.

REV	ECO	DATE	APV

Axcera®

THIS PRINT IS THE PROPERTY OF AXCERA, IT SHALL NOT BE COPIED WITHOUT PERMISSION.

MATERIAL — — — —

FINISH — — — —

TITLE B/D – 500W, 500W UPGRADEABLE OR 1kW PWR AMP CHASSIS ASSEMBLY

DWN	WB	01/06/04	DWG. NO. 1303962	REV A0
CHK	LRT	02/06/04		
REL	LRT	02/06/04	B SCALE – –	SHEET 1 OF 1

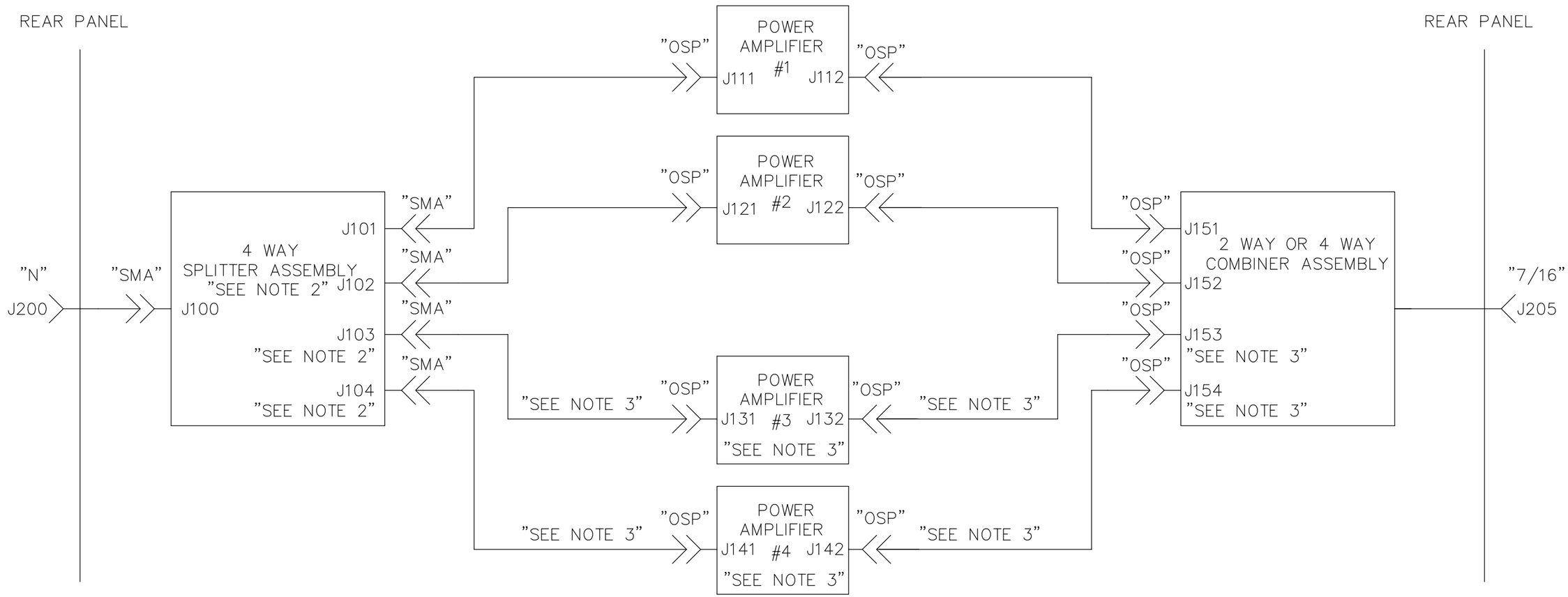

NOTE:
1. ALL CABLES ARE UT-141 SEMI-RIGID UNLESS OTHERWISE NOTED.

2. IN 500 WATT POWER AMPLIFIER ASSEMBLIES, THE JACKS NOTED ARE TERMINATED WITH 50 OHMS.

3. NOT PRESENT IN 500 WATT POWER AMPLIFIER ASSEMBLIES.

REV	ECO	DATE	APV

Axcera®

THIS PRINT IS THE PROPERTY OF AXCERA, IT SHALL NOT BE COPIED WITHOUT PERMISSION.

MATERIAL
— — — —

FINISH
— — — —

TITLE I/C, 500W OR 1 kW POWER AMPLIFIER CHASSIS ASSEMBLY

DWN	CDD	1/9/04	DWG. NO. 1303807	REV A0
CHK	LRT	1/12/04		
REL	LRT	1/12/04	B SCALE — —	SHEET 1 OF 1

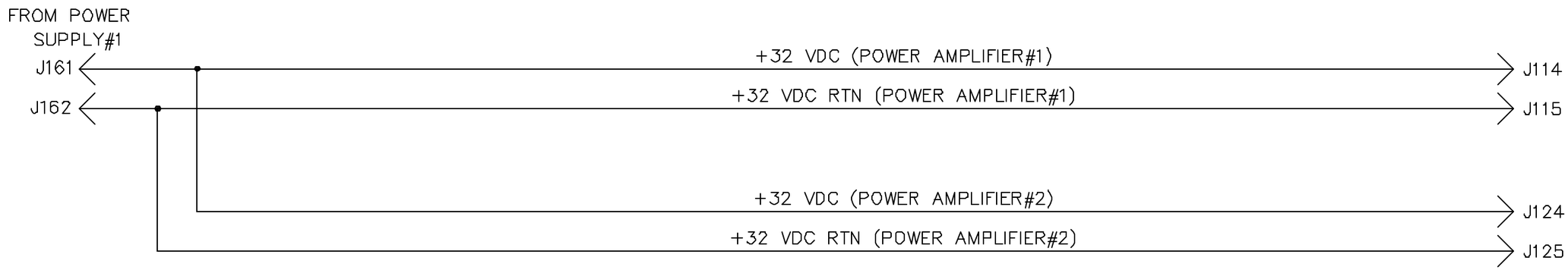

NOTE: ALL WIRES ARE 10 AWG UNLESS OTHERWISE NOTED.

REV	ECO	DATE	APV

Axcera.

THIS PRINT IS THE PROPERTY OF AXCERA, IT SHALL NOT BE COPIED WITHOUT PERMISSION.

MATERIAL
— — — —

FINISH
— — — —

TITLE I/C, DC HARNESS, CHASSIS/AIRBOX 500W, INNOVATOR LX

DWN	WB	02/06/04	DWG. NO. 1303964	REV A0
CHK	LRT	02/06/04		
REL	LRT	02/06/04	B SCALE — — —	SHEET 1 OF 1

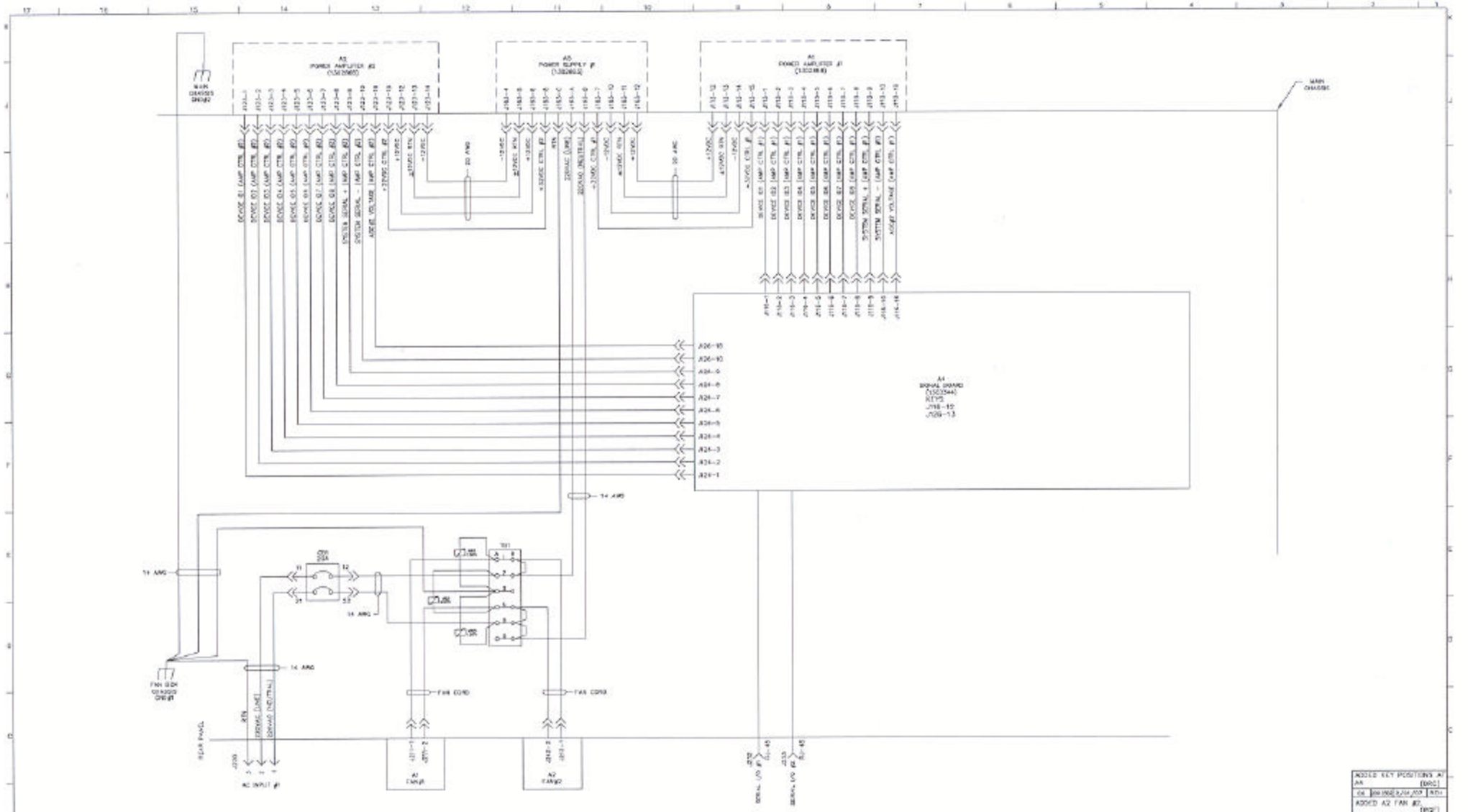

REV	ECO	DATE	APV
	ADDED KEY POSITIONS AT A4 (DRC)		
C4	0041062	9/24/03	KRT
	ADDED A2 FAN #2 (DRC)		
B6	0041085	5/13/04	LRT

Axcera.

THIS DRAWING IS THE PROPERTY OF AXCERA, IT SHALL NOT BE COPIED WITHOUT PERMISSION.

MATERIAL ------

FINISH ------

TITLE I/C
AC HARNESS, CHASSIS/AIRBOX, 500W, INNOVATOR LX

DWN	MTD	02/06/04	
CHK	LRT	02/06/04	
REL	LRT	02/06/04	

DWG NO. 1303965 REV C0

D SCALE 1=1 SHEET 1 OF 1

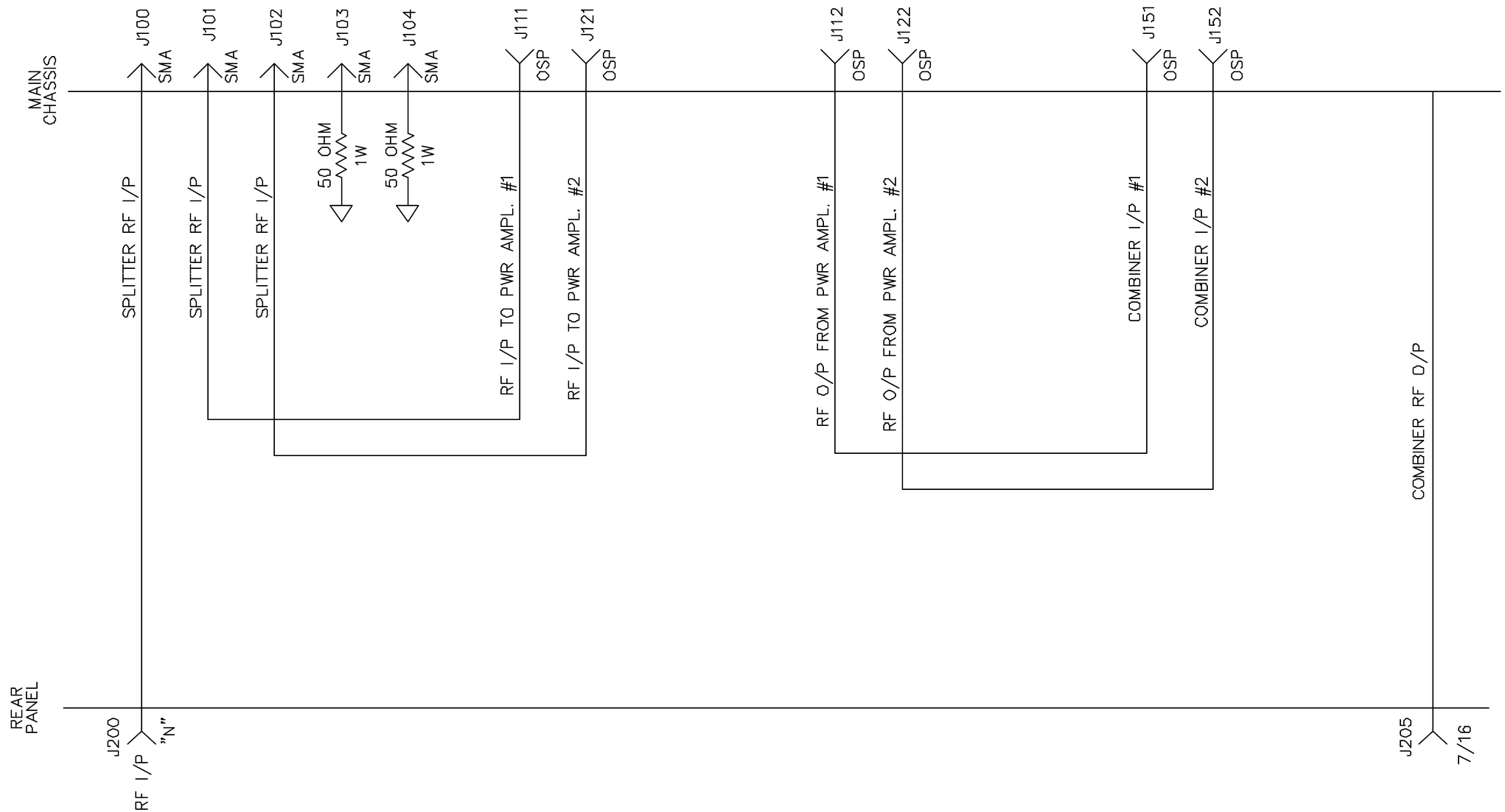

NOTE:
1. ALL CABLES ARE UT-141 SEMI-RIGID UNLESS OTHERWISE NOTED.

REV	ECO	DATE	APV

Axcera.

THIS PRINT IS THE PROPERTY OF AXCERA, IT SHALL NOT BE COPIED WITHOUT PERMISSION.

MATERIAL — — — —

FINISH — — — —

TITLE I/C, COAX CABLE ASSY, CHASSIS/AIRBOX, 500W INNOVATOR LX

DWN	WB	02/06/04	DWG. NO. 1303963	REV A0
CHK	LRT	02/06/04		
REL	LRT	02/06/04	B SCALE ---	SHEET 1 OF 1

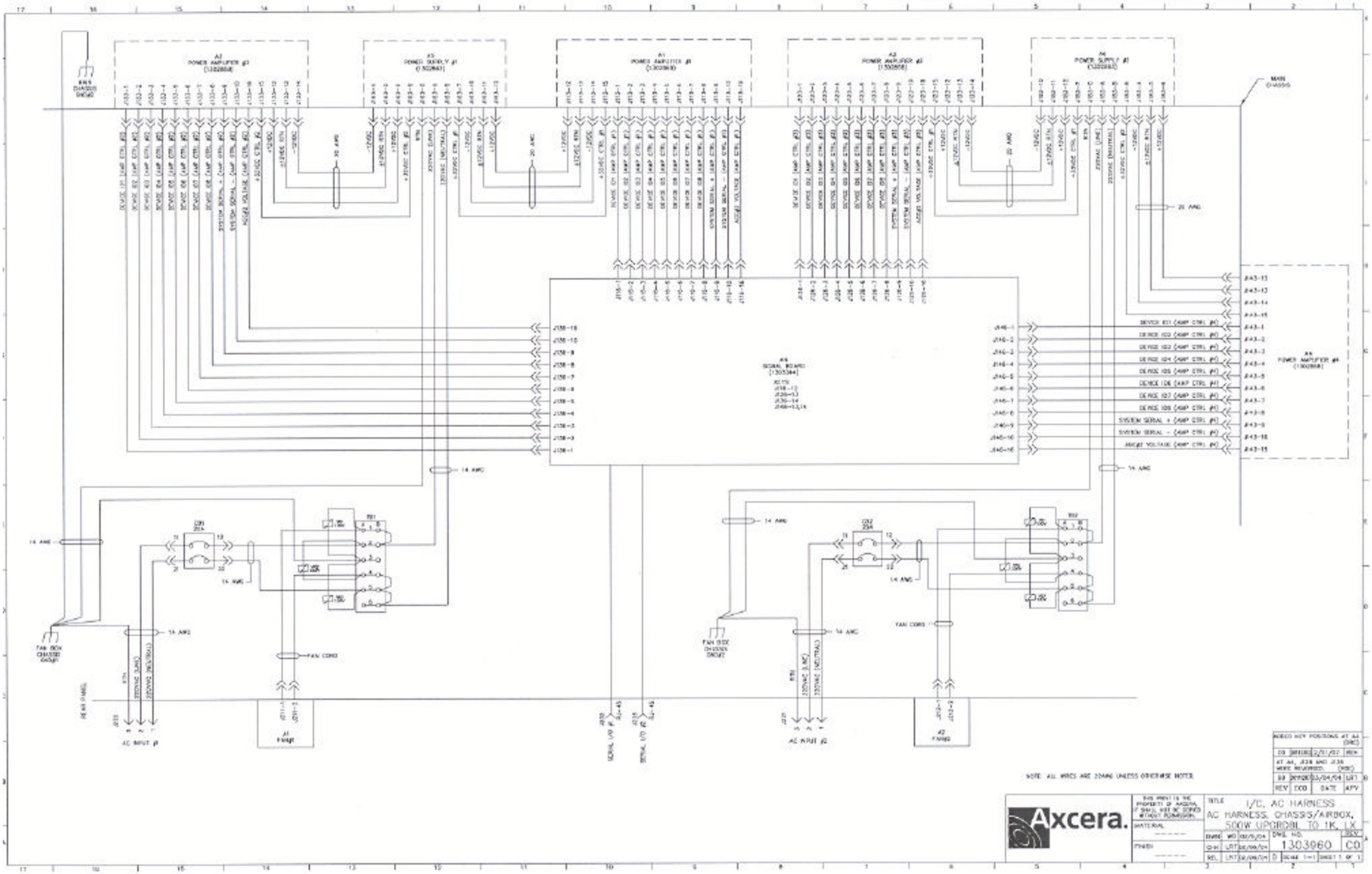
A2 POWER AMPLIFIER #3 (1302868)
A3 POWER SUPPLY #1 (1302867)
A1 POWER AMPLIFIER #1 (1302868)
A2 POWER AMPLIFIER #2 (1302868)
A4 POWER SUPPLY #1 (1302867)
A6 POWER AMPLIFIER #4 (1302868)
A5 SIGNAL BOARD (1303344)
MAIN (1-1000)
20 AWG
14 AWG
FAN CORD
AC INPUT #1
AC INPUT #2
FAN BOX CHASSIS GROUND
REAR PANEL
SERIAL I/O #1
SERIAL I/O #2
NOTE: ALL WIRES ARE 22AWG UNLESS OTHERWISE NOTED.
Axcera.
THIS PRINT IS THE PROPERTY OF AXCERA, IT SHALL NOT BE COPIED WITHOUT PERMISSION.
MATERIAL
FINISH
TITLE I/C, AC HARNESS
AC HARNESS, CHASSIS/AIRBOX, 500W UPGRADE, TO 1K, LX
DWG. NO. 1303960
REV C0
SCALE 1=1
SHEET 1 OF 1
REV ECO DATE APV

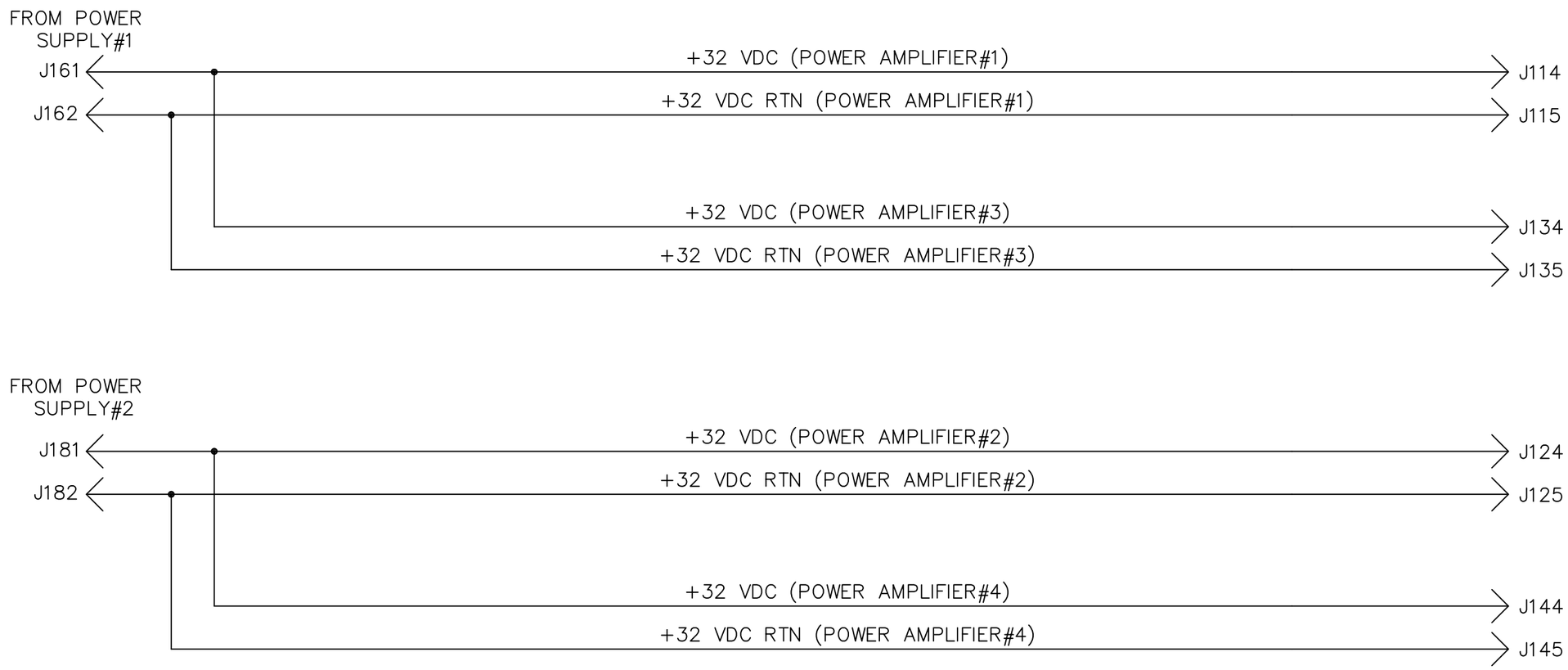

NOTE: ALL WIRES ARE 10 AWG UNLESS OTHERWISE NOTED.

REV	ECO	DATE	APV
B0	20111287	03/04/04	LRT

AMPLIFIER #2 WAS #3.
AMPLIFIER #3 WAS #2.
(RGE)

Axcera®

THIS PRINT IS THE PROPERTY OF AXCERA, IT SHALL NOT BE COPIED WITHOUT PERMISSION.

MATERIAL — — — —

FINISH — — — —

TITLE I/C, DC HARNESS, CHASSIS/AIRBOX 500W UPGRDBL TO 1KW, LX

DWN	WB	02/06/04	DWG. NO. 1303961	REV B0
CHK	LRT	02/06/04		
REL	KRT	02/06/04	B SCALE ---	SHEET 1 OF 1

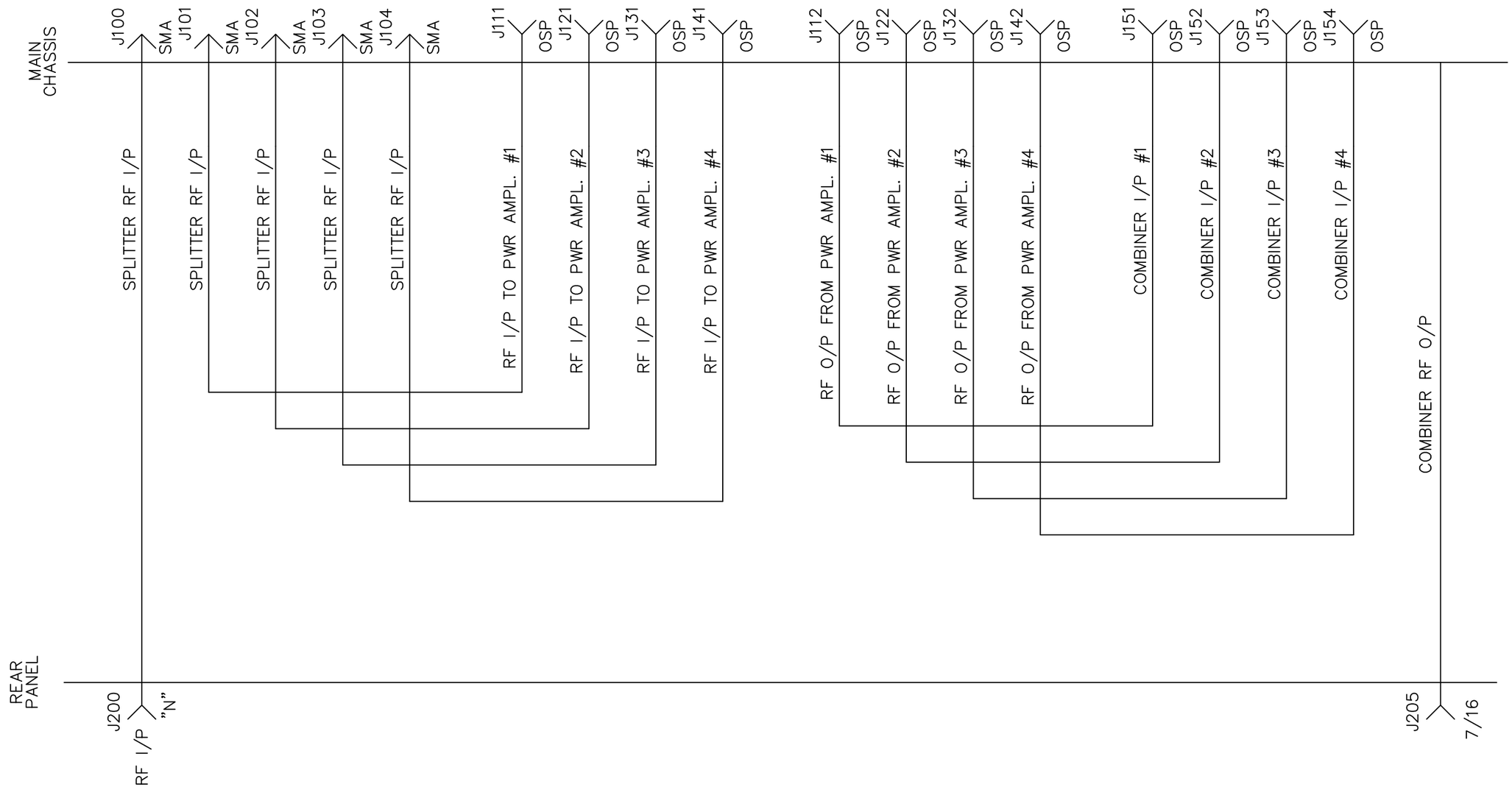

NOTE:
1. ALL CABLES ARE UT-141 SEMI-RIGID UNLESS OTHERWISE NOTED.

REV	ECO	DATE	APV

Axcera®

THIS PRINT IS THE PROPERTY OF AXCERA, IT SHALL NOT BE COPIED WITHOUT PERMISSION.

MATERIAL — — — —

FINISH — — — —

TITLE I/C, COAX CABLE ASSY, CHASSIS/AIRBOX, 1KW INNOVATOR LX

DWN	MH	10/24/03	DWG. NO. 1303480	REV A0
CHK	JCM	11/13/03		
REL	JCM	11/13/03	B SCALE ---	SHEET 1 OF 1

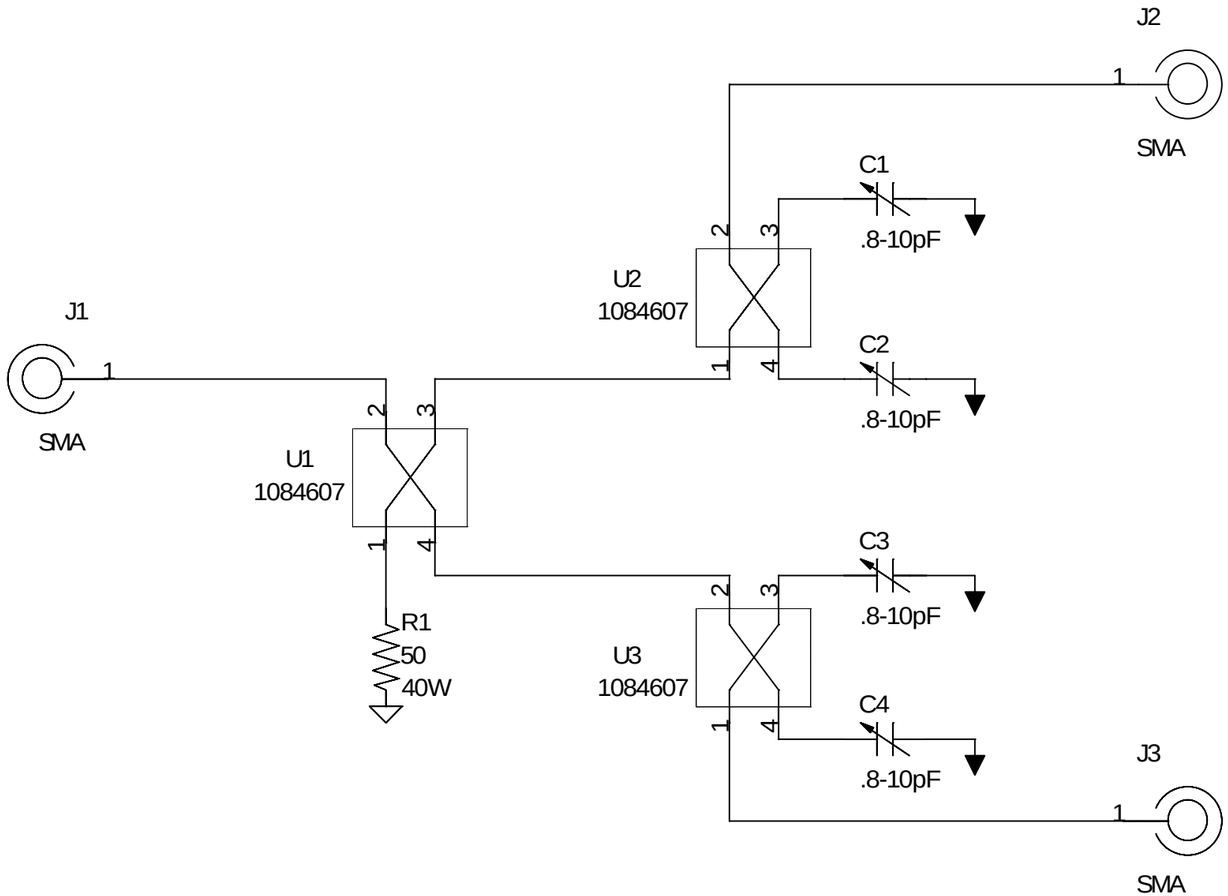

NOTE:

1) ALL RESISTORS ARE 1/8W UNLESS OTHERWISE NOTED.
2) ALL CAPACITORS ARE IN uF UNLESS OTHERWISE NOTED.
3) ALL INDUCTORS ARE IN uH UNLESS OTHERWISE NOTED.

REV	ECO	DATE	APV
B0	20111424	6/22/04	TB

CHGD CONN. OF U2 & U3. JKF

Axcera

THIS PRINT IS THE PROPERTY OF AXCERA, IT SHALL NOT BE COPIED WITHOUT PERMISSION

MATERIAL -----

FINISH -----

TITLE SCH., 2 WAY SPLITTER/PHASE SHIFTER, UHF (1303567)

DWN	JKF	11/11/03	DWG. NO. 1303569	REV B0
CHK	TB	11/12/03		
REL	TB	11/12/03	B	SCALE --- SHEET 1 OF 1

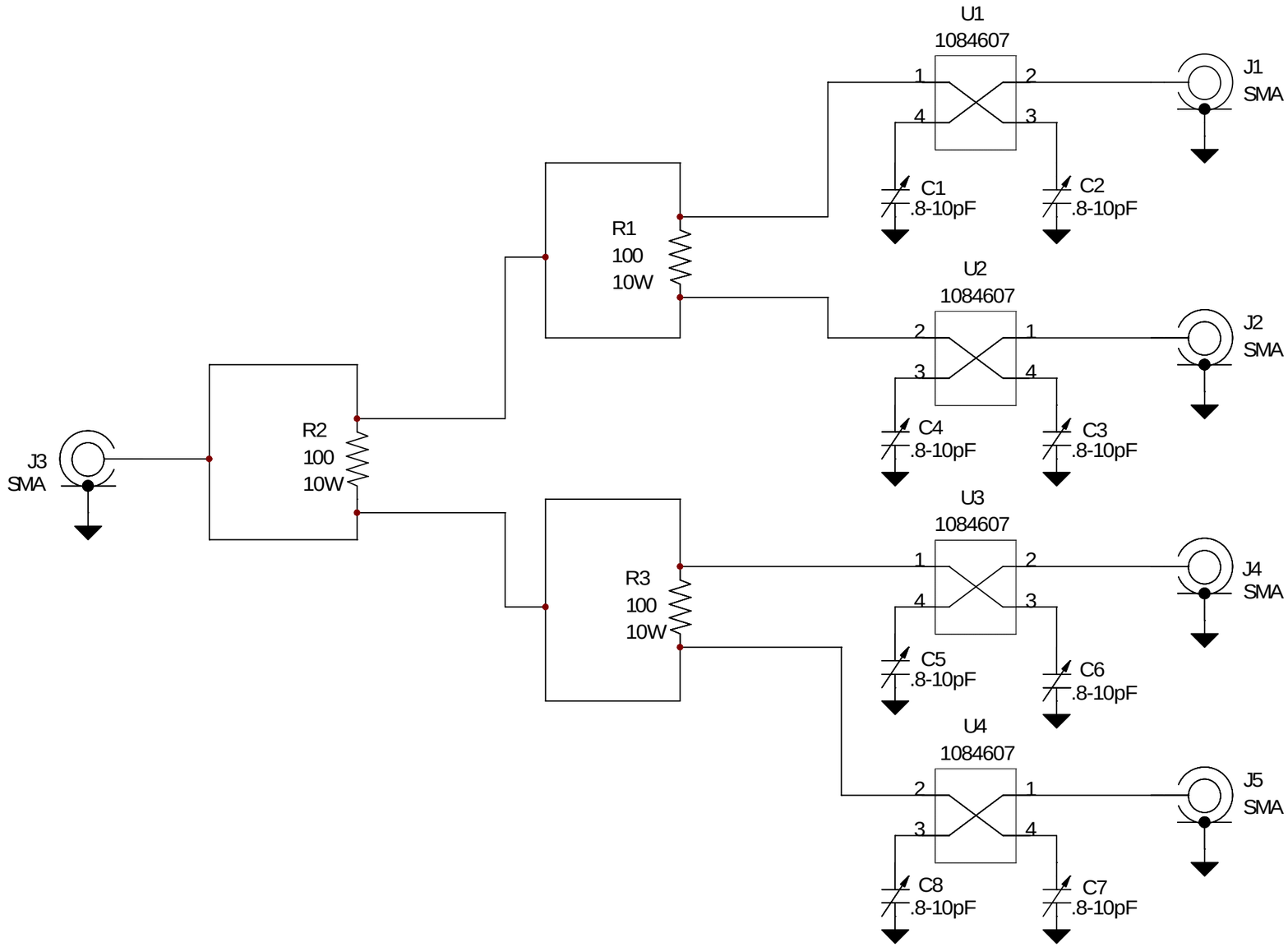

LAST USED
C8 J5 R3 U4

J1 - J5 CHANGED FROM EXTERNAL CONN. TO SMA. JKF

REV	ECO	DATE	APV
B0	20111101	11/5/03	TB

Axcera

THIS PRINT IS THE PROPERTY OF AXCERA, IT SHALL NOT BE COPIED WITHOUT PERMISSION

MATERIAL
- - - - -

FINISH
- - - - -

TITLE SCH, 4 WAY SPLITTER, UHF (1303234)

DWN	JKF	9/16/03
CHK	TB	9/23/03
REL	TB	9/23/03

DWG. NO. 1303237

REV B0

B SCALE - - - SHEET 1 OF 1

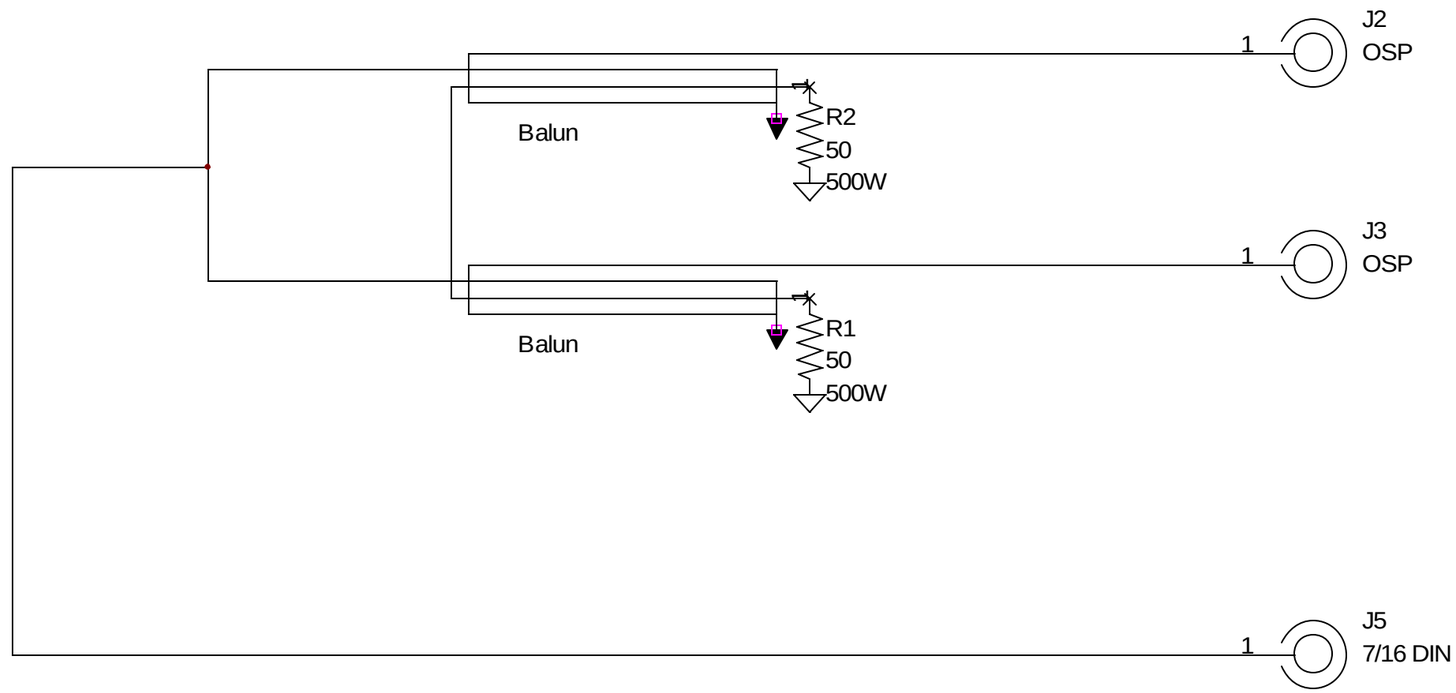

APV	Axcera	REV	ECO	DATE	APV
DATE	THIS PRINT IS THE PROPERTY OF AXCERA, IT SHALL NOT BE COPIED WITHOUT PERMISSION	TITLE	SCH., 2 WAY COMBINER BD. (1303578)		
ECO	MATERIAL -----	DWN	JKF	11/7/03	DWG. NO. 1303580	REV A0
REV	FINISH -----	CHK	TB	11/24/03		
		REL	TB	11/24/03	B	SCALE ---	SHEET 1 OF 1

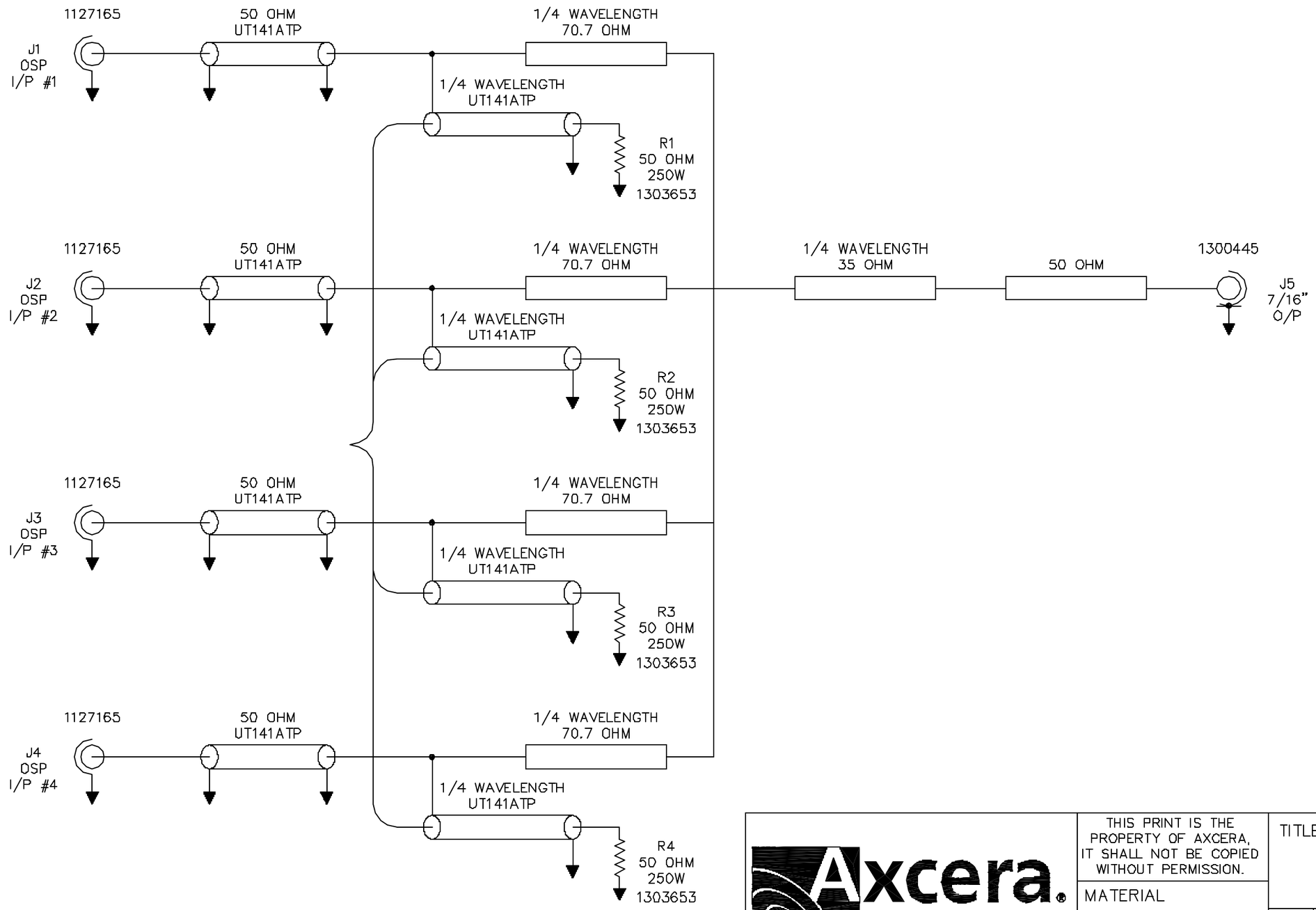

REV	ECO	DATE	APV

Axcera®

THIS PRINT IS THE PROPERTY OF AXCERA, IT SHALL NOT BE COPIED WITHOUT PERMISSION.

MATERIAL

FINISH

TITLE
SCHEMATIC,
4:1 COMBINER,
UHF, INNOVATOR LX

DWN	JKF	12/15/03	DWG. NO.	REV
CHK	PWK	12/15/03	1303655	A0
REL	PWK	12/15/03	B SCALE ---	SHEET 1 OF 1

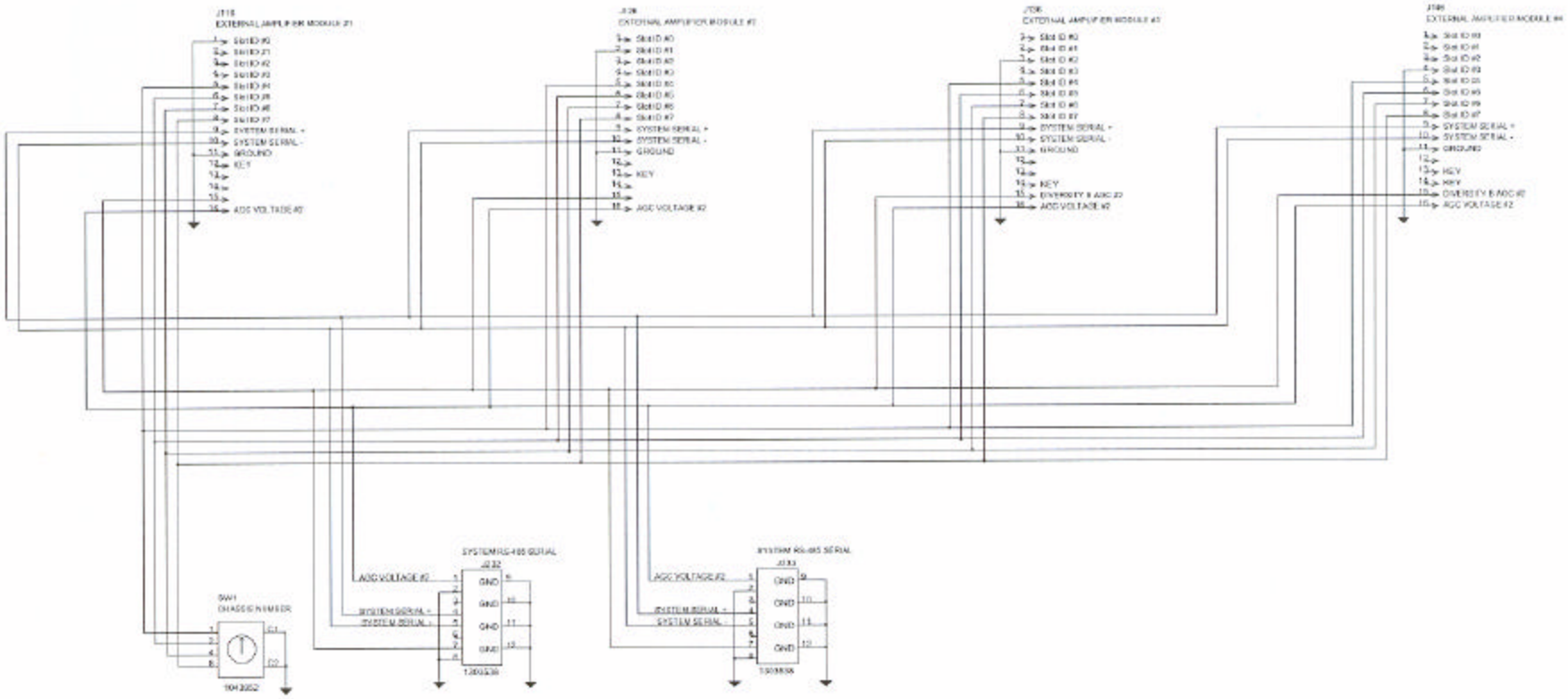

Circuit Description

Each power amplifier module plugs into an associated 16 position header. The serial address of each module is specified by the slot ID lines. A chassis number rotary switch identifies the chassis number to the amplifier modules on the upper 4 bits and the lower four bits are set by jumpers in the chassis.

Two serial I/O ports are used for System RS-485 Serial functionality.

An AGC Voltage #2 signal is carried over the System Serial cable from each of the Power Amplifiers back to the driver Up converter card. AGC Voltage #1 is from the driver #0. AGC Voltage #2 is set by the Amplifier module with the highest forward power.

REV	DCN	DATE	APV

ADDED FUNCTIONS AT J135-13 AND J145-13 CR

BD	20011802	210105	REH

CONNECT J145-14, J135-14, J138-13, J128-13, J128-7 & J133-7 KEY FROM J148-13 TO J140-10 & J118-14 JHF

CD	20011990	210105	JCM

J132 & J133 MOVE RJ45 KEY B JHF

BD	20011900	110505	REH

MATERIAL NUMBERS:
1303344 PIONEER EX AMP, SIGNAL BRD
1303345 PCB, PIONEER, EX AMP, SGNL
1303346 SCH, PIONEER, EX AMP, SGNL
(A SPACE IS NOT NEEDED IN THE NAME)

Axcera

THIS DRAWING IS THE PROPERTY OF AXCERA, IT SHALL NOT BE COPIED OR REPRINTED WITHOUT PERMISSION

MATERIAL ------

FINISH ------

TITLE SCH, PIONEER EX AMP, SGNL (1303344)

DWN	REH	9/24/03	SIZE D0
CHK	REH	10/6/03	DWG. NO. 1303346
SCL	REH	10/6/03	D SCALE: ---- SHEET 1 OF 1

NOTE: TP1 & TP2 ARE PROVIDED FOR FUNCTION TEST PURPOSES ONLY, AND ARE ACCOMPLISHED BY ADDING VIA HOLE TO TOP OF PCB.

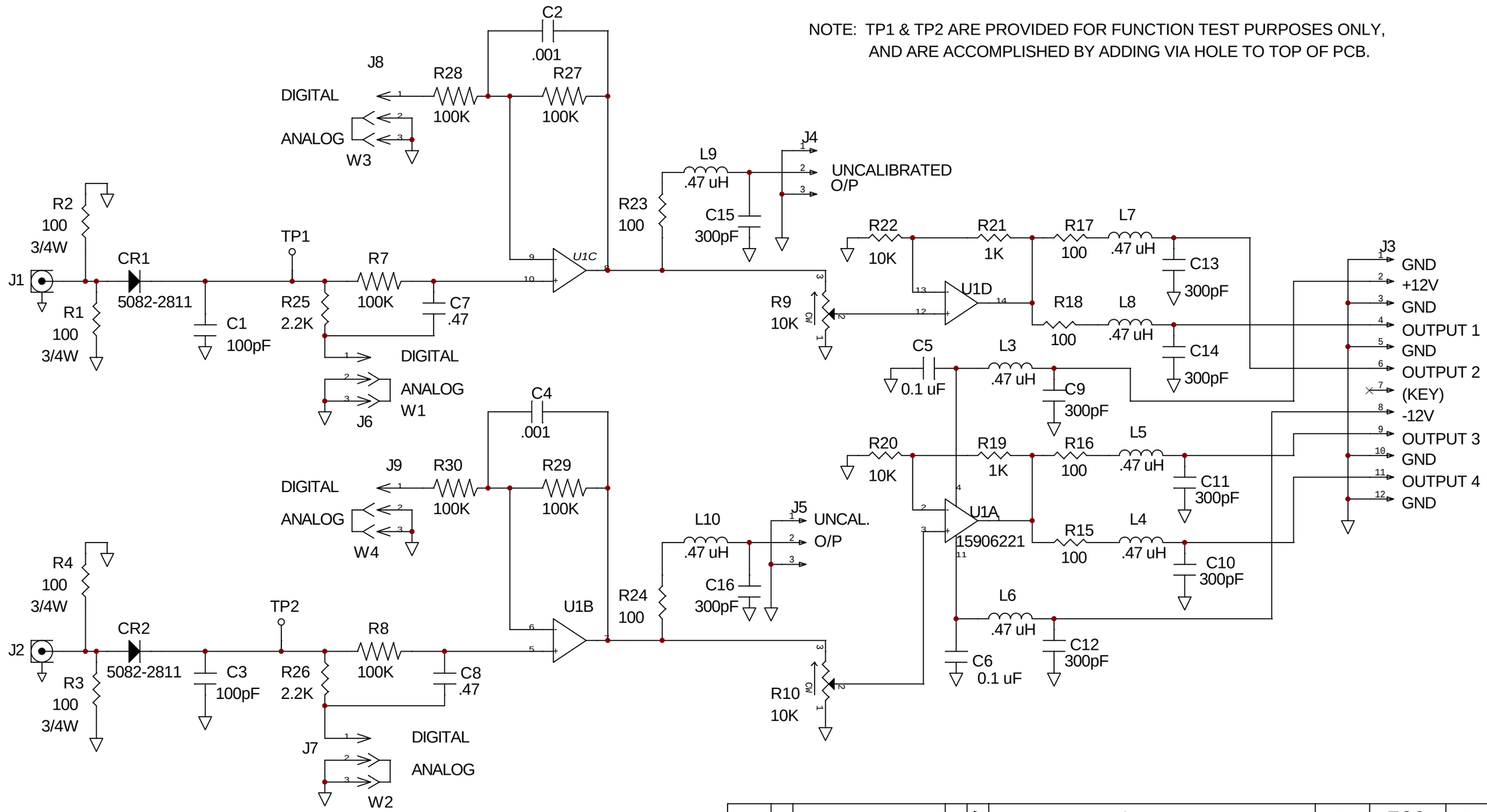

C0	20110722	5/16/03	LRT	ADDED C2 & C4. JKF		
B0	20092702	6/11/01	LRT	REMOVED C2, C4, L1, L2, CR3, AND CR4. R25 AND R26 WERE 470K. R7 AND R8 WERE 2.2K. C7 AND C8 WERE .001. ADDED J8, J9, W3, W4, R27-R30. (PJK)		
REV	ECO	DATE	APV			

Axcera

REV	ECO	DATE	APV

THIS PRINT IS THE PROPERTY OF AXCERA, IT SHALL NOT BE COPIED WITHOUT PERMISSION

MATERIAL -----

FINISH -----

TITLE SCH., DUAL PEAK DETECTOR, SMT (1159965)

DWN	PJK	2/23/00
CHK	LRT	2/26/01
REL	LRT	2/26/01

DWG. NO. 1159976 REV C0

B SCALE --- SHEET 1 OF 1

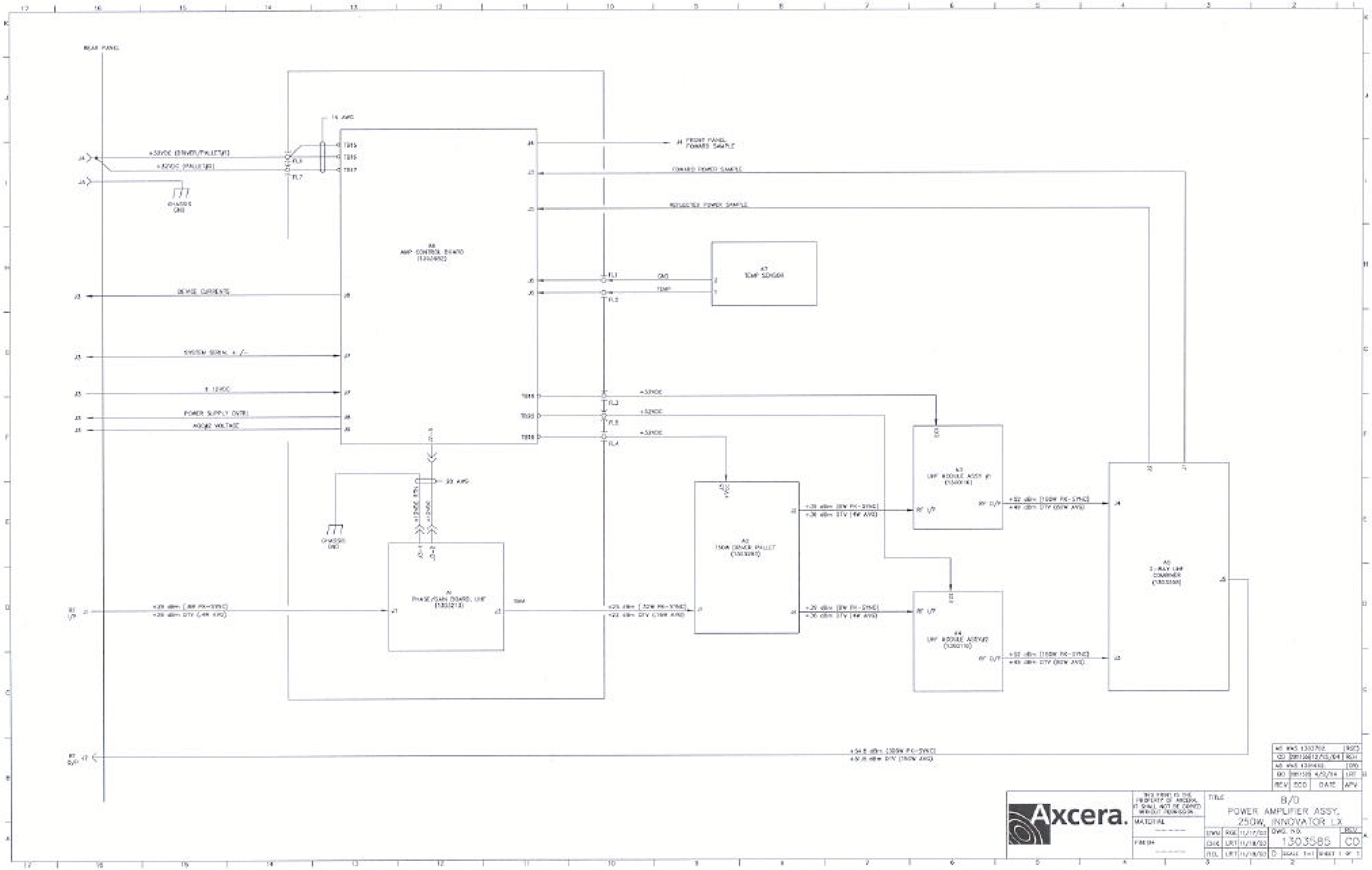
REAR PANEL
14 AWG
+32VDC (DRIVER/PALLET#1)
+32VDC (PALLET#2)
TB15
TB16
TB17
FL6
FL7
CHASSIS GND
A6
AMP CONTROL BOARD
J4 FRONT PANEL FORWARD SAMPLE
FORWARD POWER SAMPLE
REFLECTED POWER SAMPLE
A7
TEMP SENSOR
GND
TEMP
FL1
FL2
DEVICE CURRENTS
SYSTEM SERIAL + / -
± 12VDC
POWER SUPPLY CNTRL
AGC#2 VOLTAGE
+32VDC
FL3
FL5
FL4
TB18
TB20
20 AWG
+12VDC RTN
+12VDC
A1
PHASE/GAIN BOARD, UHF
(1303213)
+29 dBm (.8W PK-SYNC)
+26 dBm DTV (.4W AVG)
+25 dBm (.32W PK-SYNC)
+22 dBm DTV (.16W AVG)
A2
150W DRIVER PALLET
+39 dBm (8W PK-SYNC)
+36 dBm DTV (4W AVG)
A3
UHF MODULE ASSY #1
RF I/P
RF O/P
+52 dBm (160W PK-SYNC)
+49 dBm DTV (80W AVG)
A4
UHF MODULE ASSY#2
A5
2-WAY UHF COMBINER
+54.8 dBm (300W PK-SYNC)
+51.8 dBm DTV (150W AVG)
RF I/P
RF O/P
Axcera.
REV ECO DATE APV
TITLE
B/D
POWER AMPLIFIER ASSY,
250W, INNOVATOR LX
DWG NO.
1303585
REV
CD
MATERIAL
FINISH
SCALE 1=1
SHEET 1 OF 1

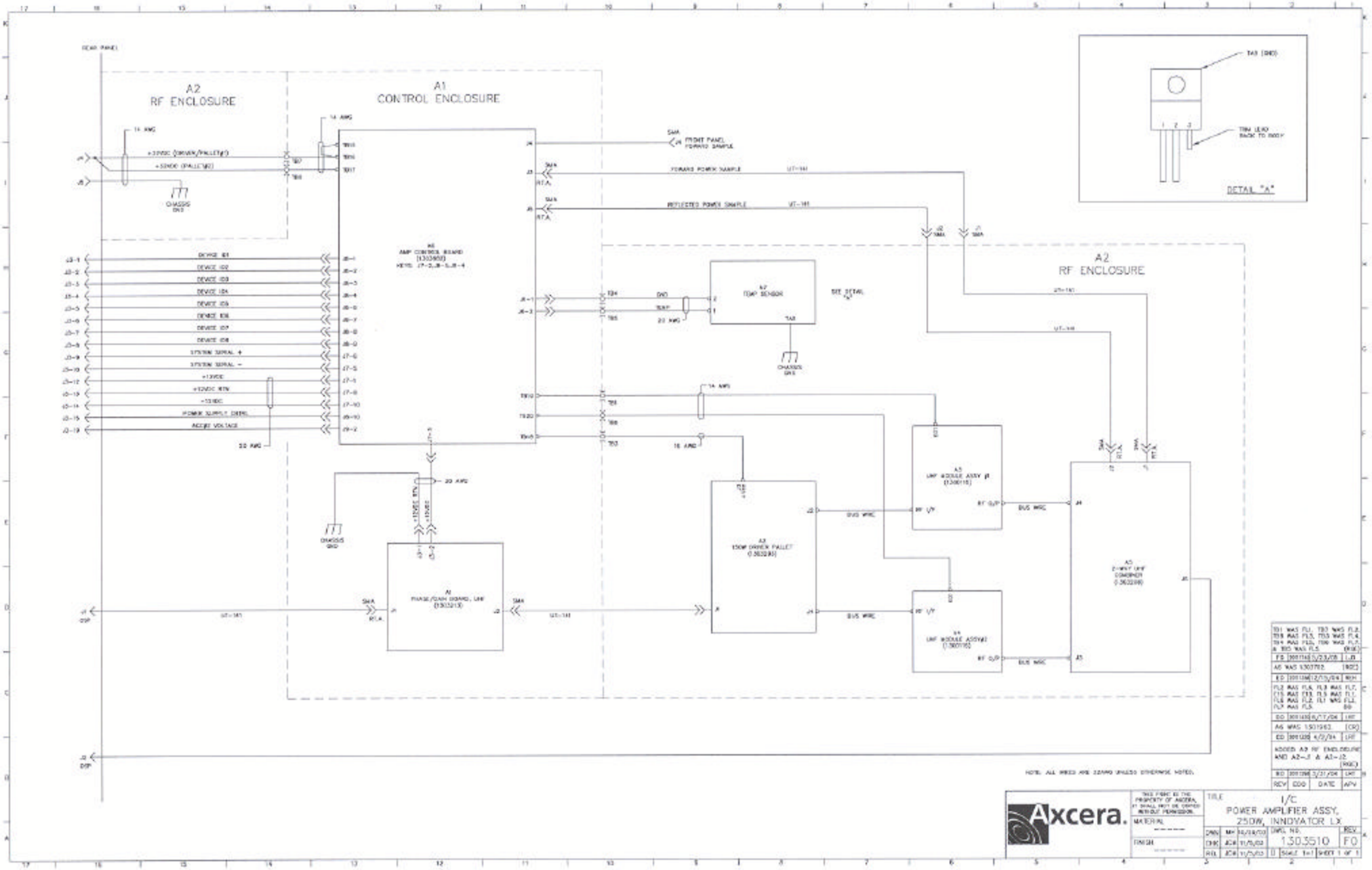
A2
RF ENCLOSURE
A1
CONTROL ENCLOSURE
A6
AMP CONTROL BOARD
(1303950)
A7
TEMP SENSOR
A3
250W DRIVER PALLET
(1302280)
A4
UHF MODULE ASSY
(1300195)
A5
2-WAY UHF
COMBINER
(1302288)
A1
PHASE/GAIN BOARD, UHF
(1302213)
FRONT PANEL
FORWARD SAMPLE
FORWARD POWER SAMPLE
REFLECTED POWER SAMPLE
DEVICE 101
DEVICE 102
DEVICE 103
DEVICE 104
DEVICE 105
DEVICE 106
DEVICE 107
DEVICE 108
SYSTEM SERIAL +
SYSTEM SERIAL −
+13VDC
+12VDC RTN
+12VDC
POWER SUPPLY DISPL
ACCEL VOLTAGE
CHASSIS GND
BUS WIRE
DETAIL "A"
TAB (GND)
TRIM LEAD
BACK TO BODY
NOTE: ALL WIRES ARE 22AWG UNLESS OTHERWISE NOTED.
Axcera.
TITLE
I/C
POWER AMPLIFIER ASSY,
250W, INNOVATOR LX
DWG. NO.
1303510
REV.
F0
SCALE 1=1
SHEET 1 OF 1
REV
CDO
DATE
APV

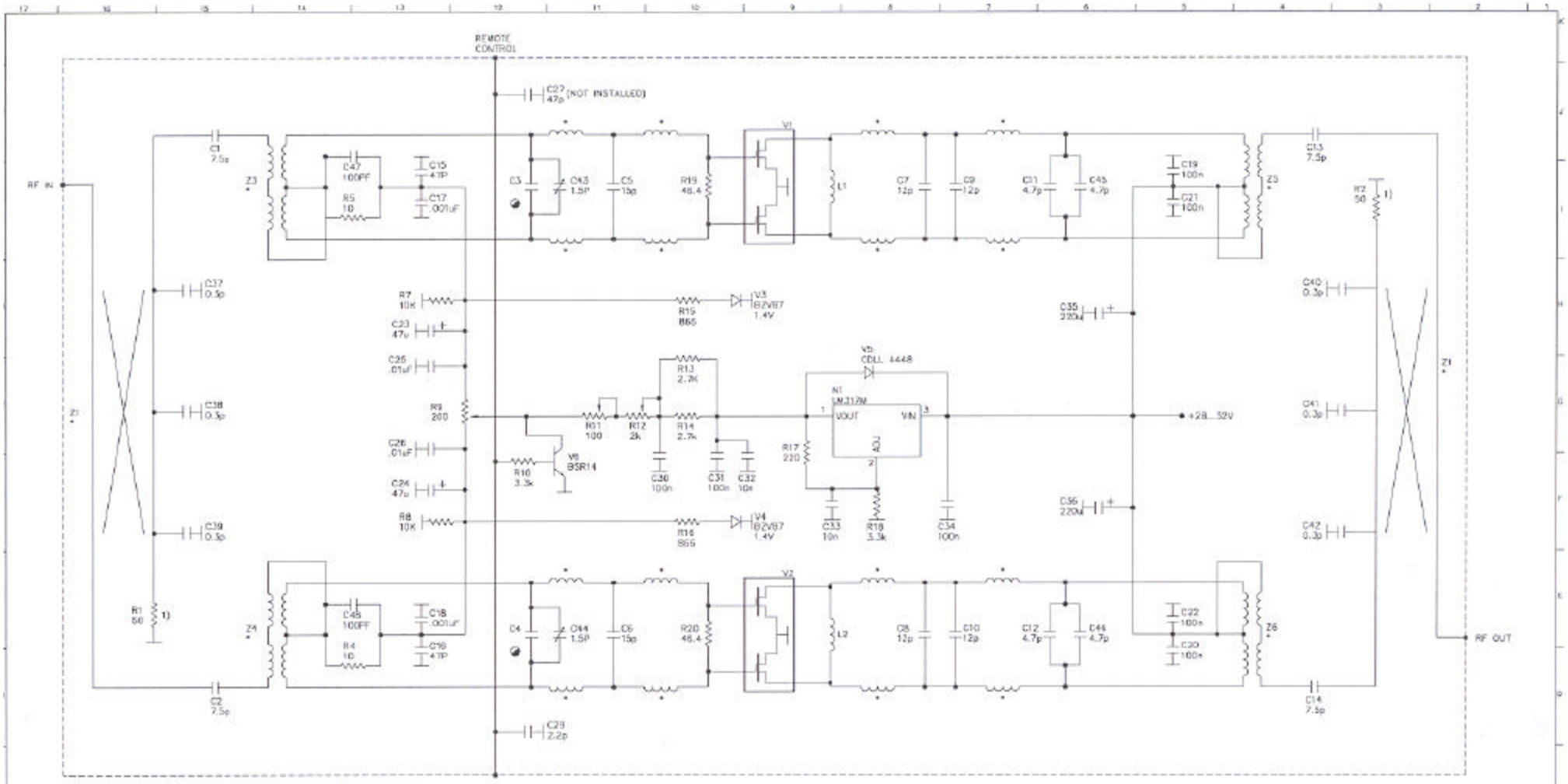

* PRINTED COMPONENT

FACTORY SET VALUE

PC BOARD LAYOUT SEE
51-5379-309-00 (2)

Axcera.

TITLE: AMPLIFIER MODULE

DWG. NO. 51-5379-309-00 REV FO

SHEET 1 OF 1

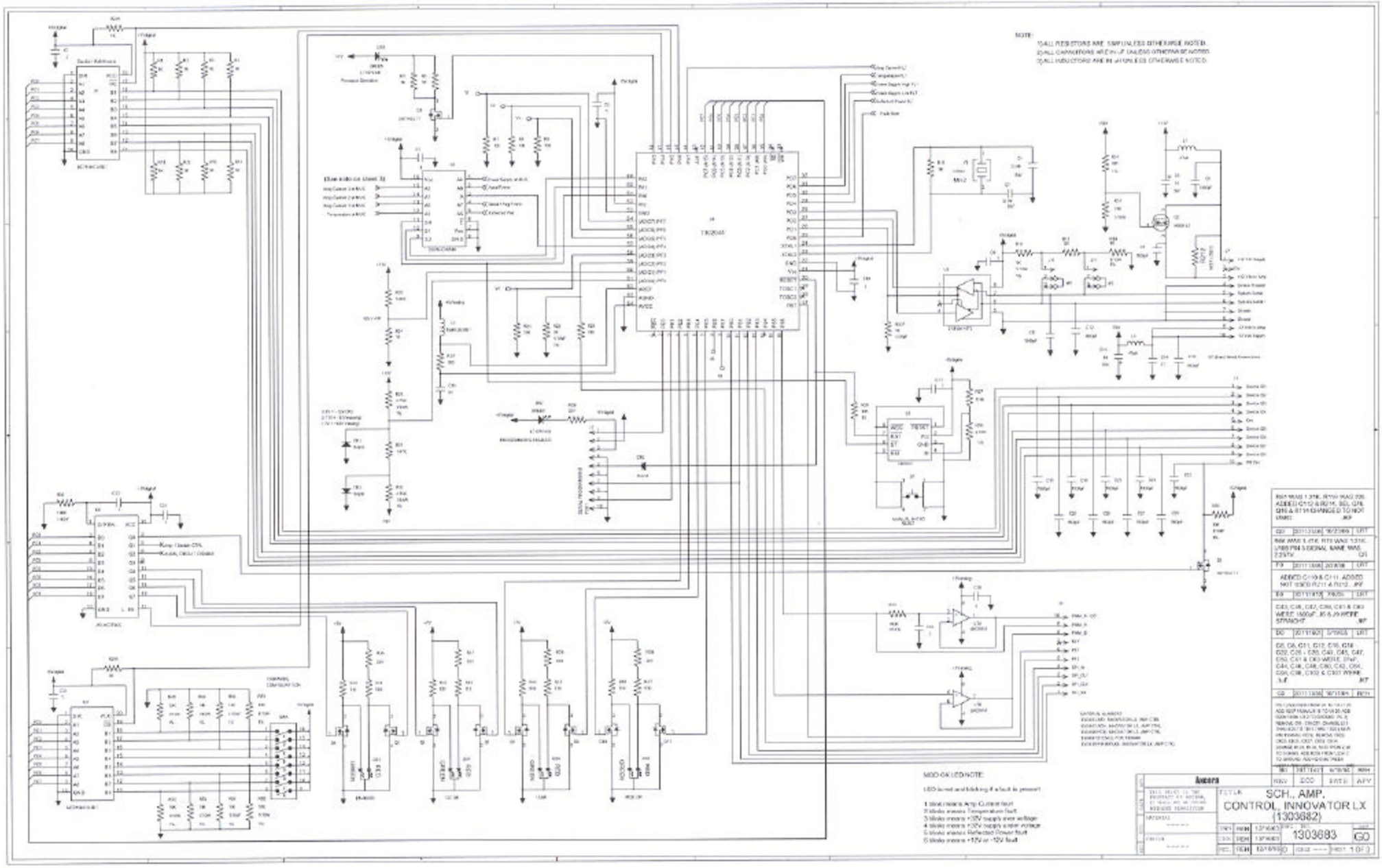
NOTE:
1) ALL RESISTORS ARE 1/8W UNLESS OTHERWISE NOTED.
2) ALL CAPACITORS ARE IN µF UNLESS OTHERWISE NOTED.
3) ALL INDUCTORS ARE IN µH UNLESS OTHERWISE NOTED.
MOD OK LED NOTE:
LED is not and blinking if a fault is present
1 blink means Amp Current fault
2 blinks means Temperature fault
3 blinks means +32V supply over voltage
4 blinks means +32V supply under voltage
5 blinks means Reflected Power fault
6 blinks means +12V or -12V fault
Amera
SCH., AMP. CONTROL, INNOVATOR LX (1303682)
1303683
GO

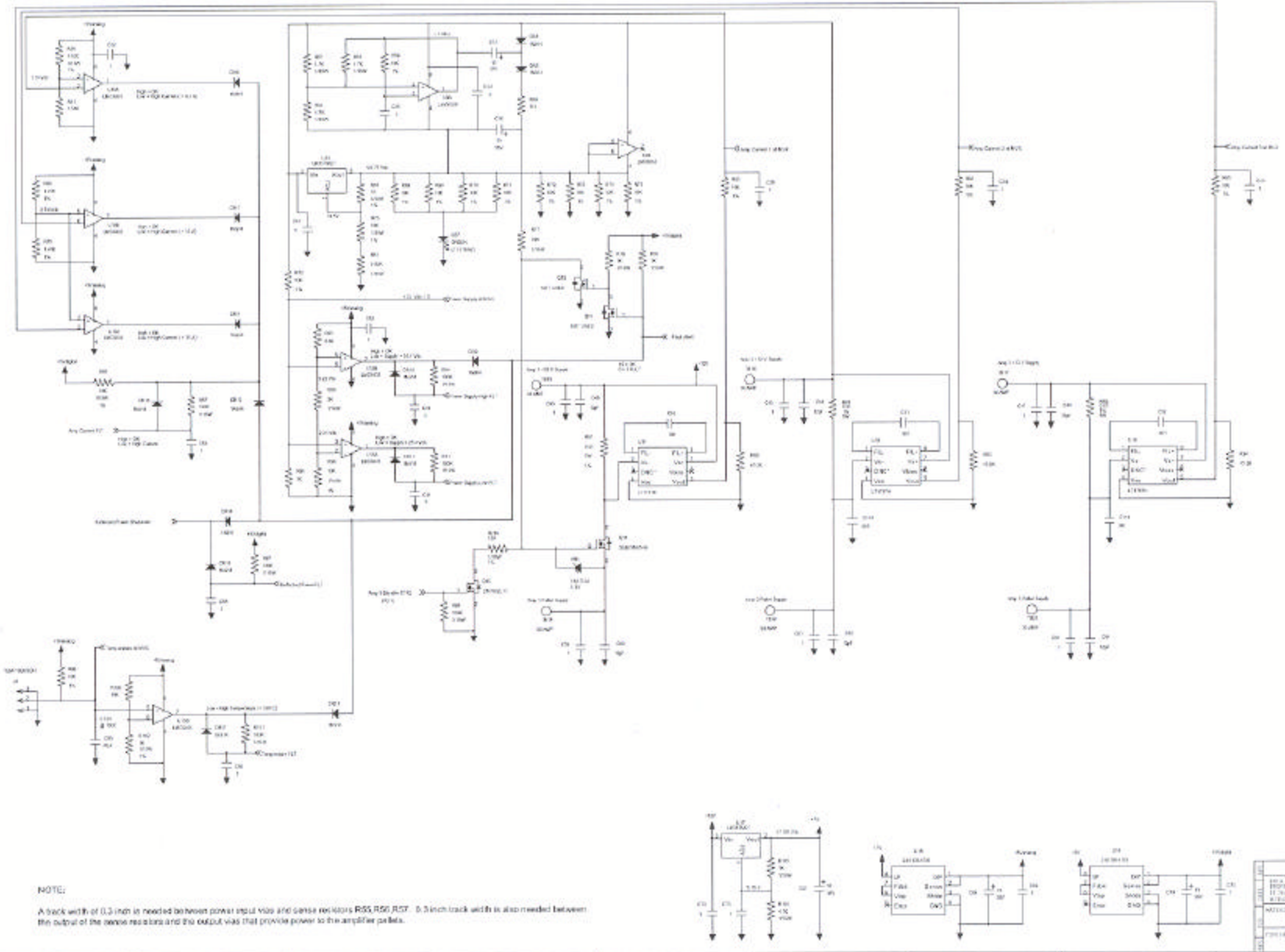

NOTE:

A track width of 0.3 inch is needed between power input vias and sense resistors R55,R56,R57. 0.3 inch track width is also needed between the output of the sense resistors and the output vias that provide power to the amplifier pellets.

Axcera	REV	ECO	DATE	APV
TITLE: SCH., AMP. CONTROL, INNOVATOR LX (1303682)				
DWN RDH 12/19/00	SIZE D	1303683	REV G0	
CHK RDH 12/19/00				
SCL RDH 12/19/00	SCALE NONE	SHEET 2 OF 3		

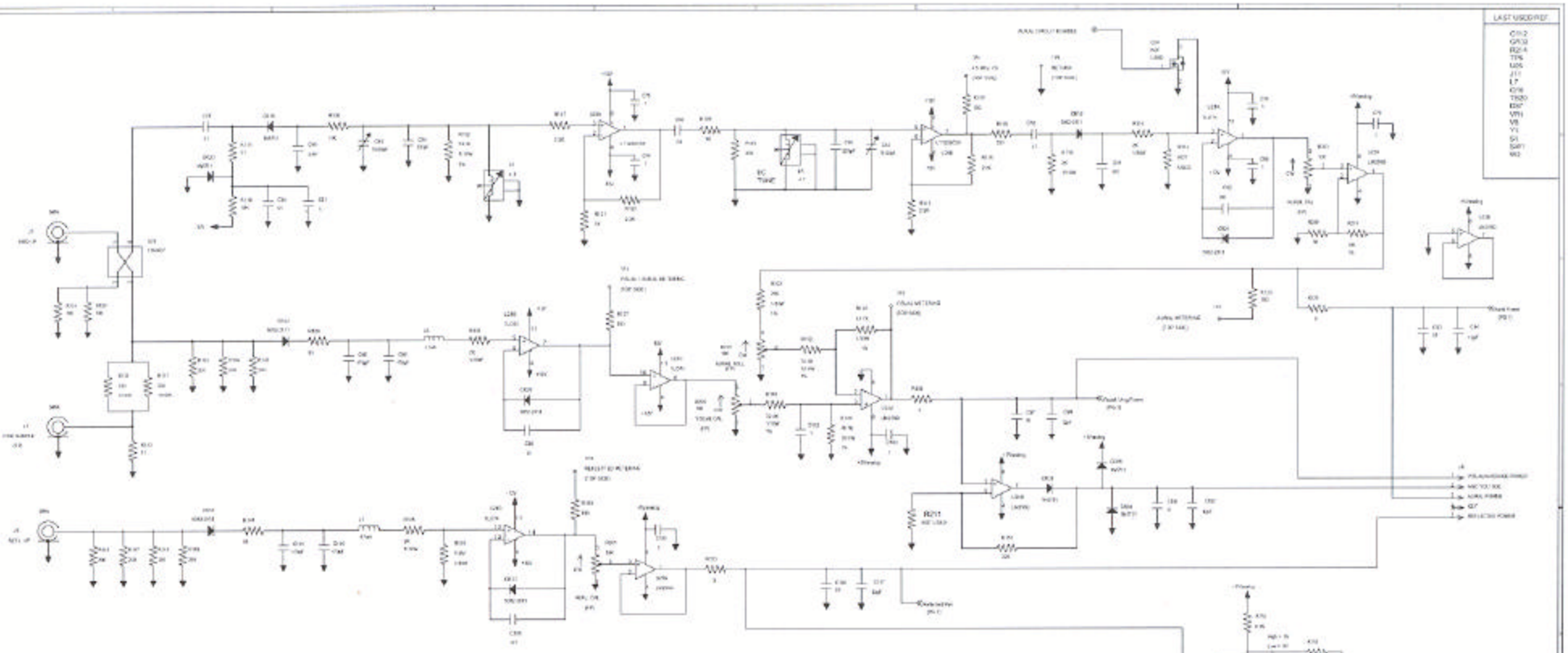

Circuit Description

Page 1:

Upper center of page one is U4 which is the controller. The microcontroller is operated at 3.6864 MHz. Programming of this device is performed through J2. U4 selects the desired analog channel of U5 through the settings of PA0 - PA2. PA3 of U4 is a processor operating LED that can be flashed to show control and operation.

RT1 is used to monitor the +12 Vdc supply to the board. PA4 is the selected channel of analog input in U5. PB3 and other wired microcontroller pins are connected to a socket for future features.

U2 is our standard serial to RS-485 driver IC. U5 is a watchdog IC used to hold the microcontroller in reset if the supply voltage is less than +4.21 Vdc (1.25 Vdc < Pin 4 (IN) < Pin 2 (Vcc)). U5 momentarily repeats the microcontroller if Pin 6 (STD) is not clocked every second. A manual reset switch is provided but should not be needed.

Upper left corner U1 is used to determine where the amplifier control board is located. The eight inputs come from amp connector J4 and are used to set the SCADA address of the controller. Pull-up resistors set a default condition of logic high.

U6 below U1 is used to control two of the four boards status LEDs and three other circuits that are not allowed to change state during a microwave oven reset. A FET is turned on to shut current away from the LED to turn it off. U8 below U6 is used to enable different features within software. Actual use is TBD.

Page 2:

In the lower right corner are voltage regulator circuits. U12 should allow for 0.1 amps of power using a 50 C/W rating if Ta = 85C max and Tj = 125C max. 0.3A a max can be attained from U11 if the mounting pad is 0.5 sq. inches. The controller will not need this much current.

U13 and U15 are low drop-out voltage regulators with a tolerance greater than or equal to 1%. 100 mA is available from each device but again the controller will not need this much current.

In the upper left section are circuits with U9 and U11. U11 is used to generate a regulated voltage that is one of 5 Volts less than the +32 Volt supply. When the +32 Volt supply is enabled, the circuitry around U9A is used to provide gate voltages to Q14 that is 5 volts greater than the source pin of this FET. The gate of Q14 can be turned off by a signal of a few different circuits. These circuits are wired through Q12 and Q13. At the time these transistors are not installed but they may be installed to ensure that the +32 does turn on a detected fault. Without Q12 and Q13 installed, Q14 is only turned off by the microcontroller through Q16.

U18A is used to detect high current in amplifier #1. At 1.18 Vdc, the current to amplifier #1 should be about 5.29 Amps. U18B and U18A are used to detect a high current condition in amplifier stages #2 or #3. With a 2.74 Vdc reference, high current shut down should be about 15 Amps.

U19A in stage 2 is used to detect high reflected power. U19B determines if the power supply temperature gets too hot.

Current Monitoring Systems. A 0.01 ohm 1% 5 Watt thin film resistor is used for monitoring the current through several sections of the amplifier. The voltage developed across this resistor is amplified for current monitoring by U14, U15, or U16. The Linear Technology LT1637IVCS5 power or high side current sense amplifier accepts a maximum voltage of 100 Vdc. The 43.2 Kohm resistor from Pin 1 to gnd sets the gain of the amplifier to about 17.28. This value is not set with much accuracy since the manufacturer internal resistor tolerance of this part isn't their actual resistance value is not closely defined. A trimming resistor is suggested to give a temperature stability of +-200ppm/C but instead the microcontroller will determine the exact gain of the circuit and use a correction factor for measurements.

Page 3:

RF power detector circuits. Q18 is used by the microcontroller to disable the analog out of a digital transmitter or external amplifiers when the amplifier is not in a mode to output power.

The Visual or Forward power circuit is calibrated and presented on the input of U24B pin 5. If this module has the highest detected forward power in a multi amplifier system, it will have the highest forward power signal. This signal goes into U24B pin 5 and be used to set the AOG output voltage of /5-2. If another amplifier has a higher forward power, the level into U24B pin 5 will be higher than pin 6 and the amplifiers output signal will not be used to set the voltage level of /5-2.

LAST USED REF.

C112
CR10
R214
TP6
U26
J11
L7
Q16
TR20
R97
VR1
VR
V1
S1
SW1
W2

	Axcera	REV	ECO	DATE	APV
	TITLE SCH., AMP. CONTROL, INNOVATOR LX (1303682)				
	DRN RBH 12/19/03	SIZE	NO. 1303683		REV G0
	CHK RBH 12/19/03				
	APV RBH 12/19/03	SCALE ---	SHEET 3 OF 3		

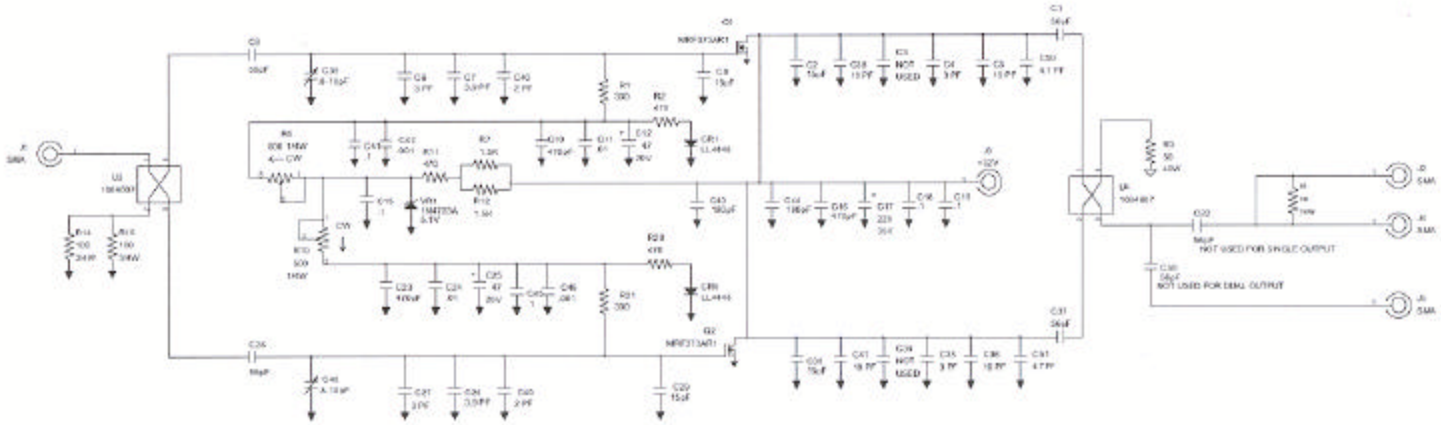

LAST USED REF.

C51
J9
R21
Q2
CR6
U2
VR1

C50 & C51 WERE 3.9PF. JKF

R3	28 11 2002	9/9/05	TRT

R3 & R7 WERE 36 R1/2W EACH JKF

D2	28 11 2002	12/9/02	TB

C2, C5, C21 & C30 WERE 4.7 PF, C3, C26, C36 & C47 WERE 1 PF, C1 & C28 WERE 5.1 PF, C48 & C49 WERE 10 PF, C3, C5, C34 & C36 WERE 3 PF. ADDED C50 & C51. JKF

C0	28 11 2002	12/9/02	TB

ADDED C40, C41, C2, C3, C4, C5, C6, C7, C8, C22, C26, C29, C33, C34, C35 & C36 WERE 56pF. R11 & R21 WERE 33 OHM. C17 & C25 WERE 10uF, 16V. SWITCHED PIN 1 & 5 C0806 CH. RS DELETED JKF

08	28 11 2002	12/9/02	TB

Aurora

ASSY	ECO	DWGS	APP

TITLE SCH., 150W. DRIVER, UHF. (1303293)

DRN	TB	9/15/03	PART - 800-	REV
CHK	TB	9/12/03	1303171	E0
ENG	TB	9/12/03	SCALE ---	SHEET 1 OF 1

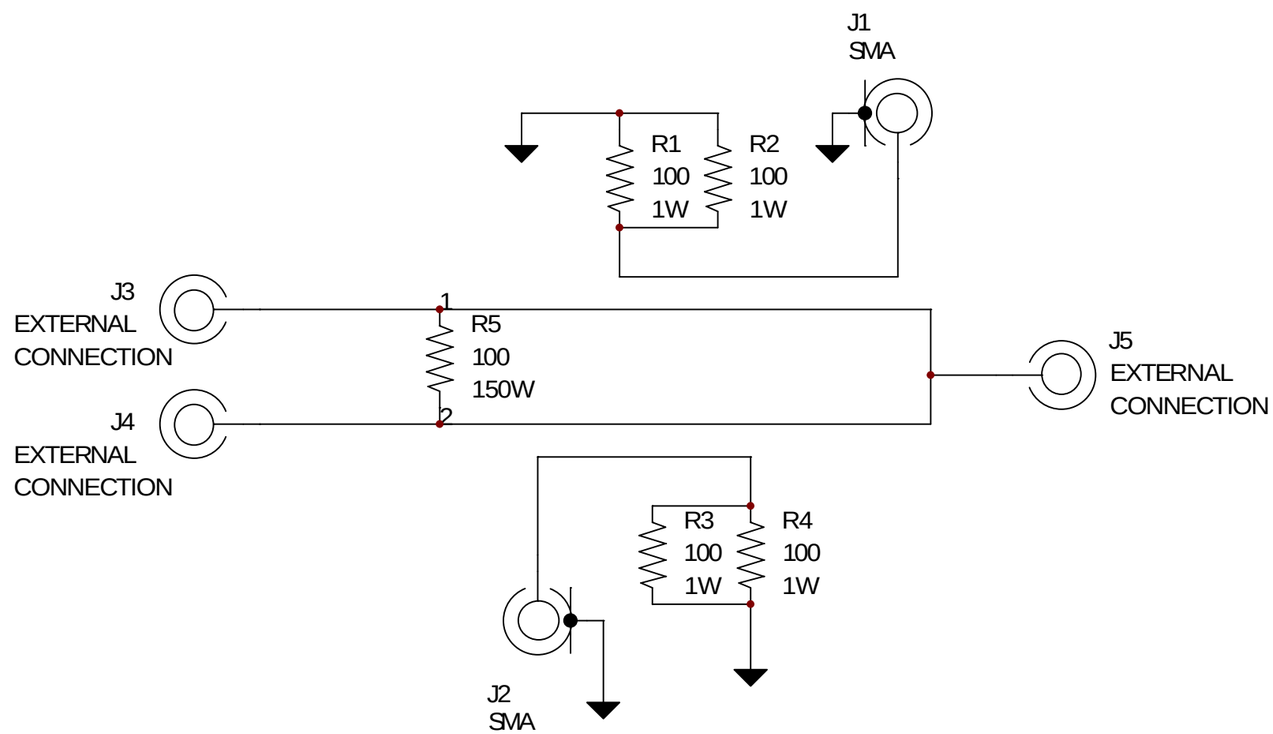

APV	Axcera	REV	ECO	DATE	APV
DATE	THIS PRINT IS THE PROPERTY OF AXCERA, IT SHALL NOT BE COPIED WITHOUT PERMISSION	TITLE	SCH., 2 WAY COMBINER, UHF (1303208)		
ECO	MATERIAL -----	DWN	JKF	9/11/03	DWG. NO. 1303211 / REV A0
REV	FINISH -----	CHK	TB	9/11/03	
		REL	TB	9/11/03	B / SCALE - - - / SHEET 1 OF 1

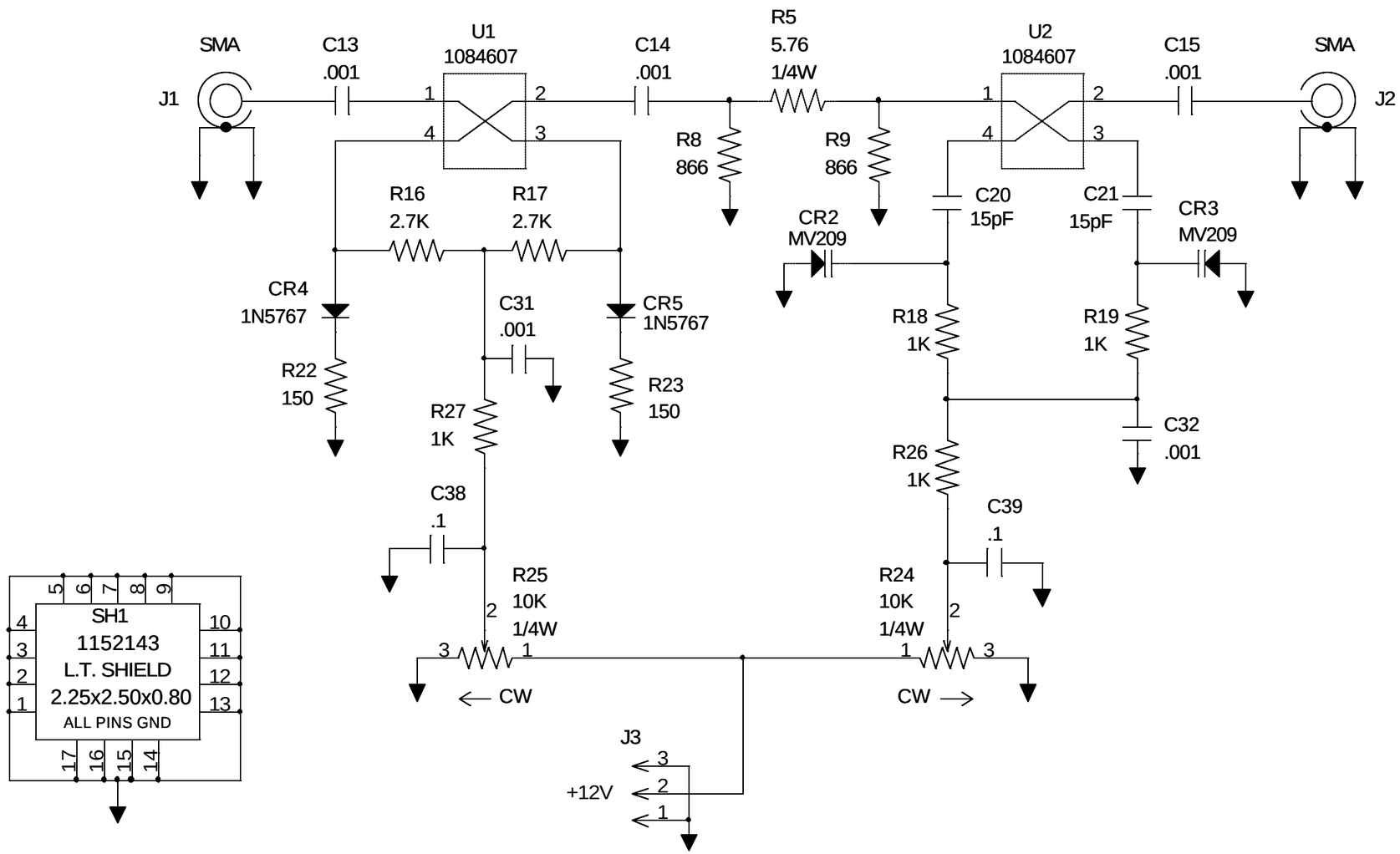

R5 WAS 18 OHM. R8 & R9 WERE 300 OHM. JKF

REV	ECO	DATE	APV
B0	20111399	3/1/06	LRT

Axcera

THIS PRINT IS THE PROPERTY OF AXCERA, IT SHALL NOT BE COPIED WITHOUT PERMISSION

MATERIAL ----

FINISH ----

TITLE SCH., PHASE / GAIN BD., UHF (1303213)

DWN	JKF	9/2/03
CHK	TB	9/11/03
REL	TB	9/11/03

DWG. NO. 1303216 REV B0

B SCALE --- SHEET 1 OF 1

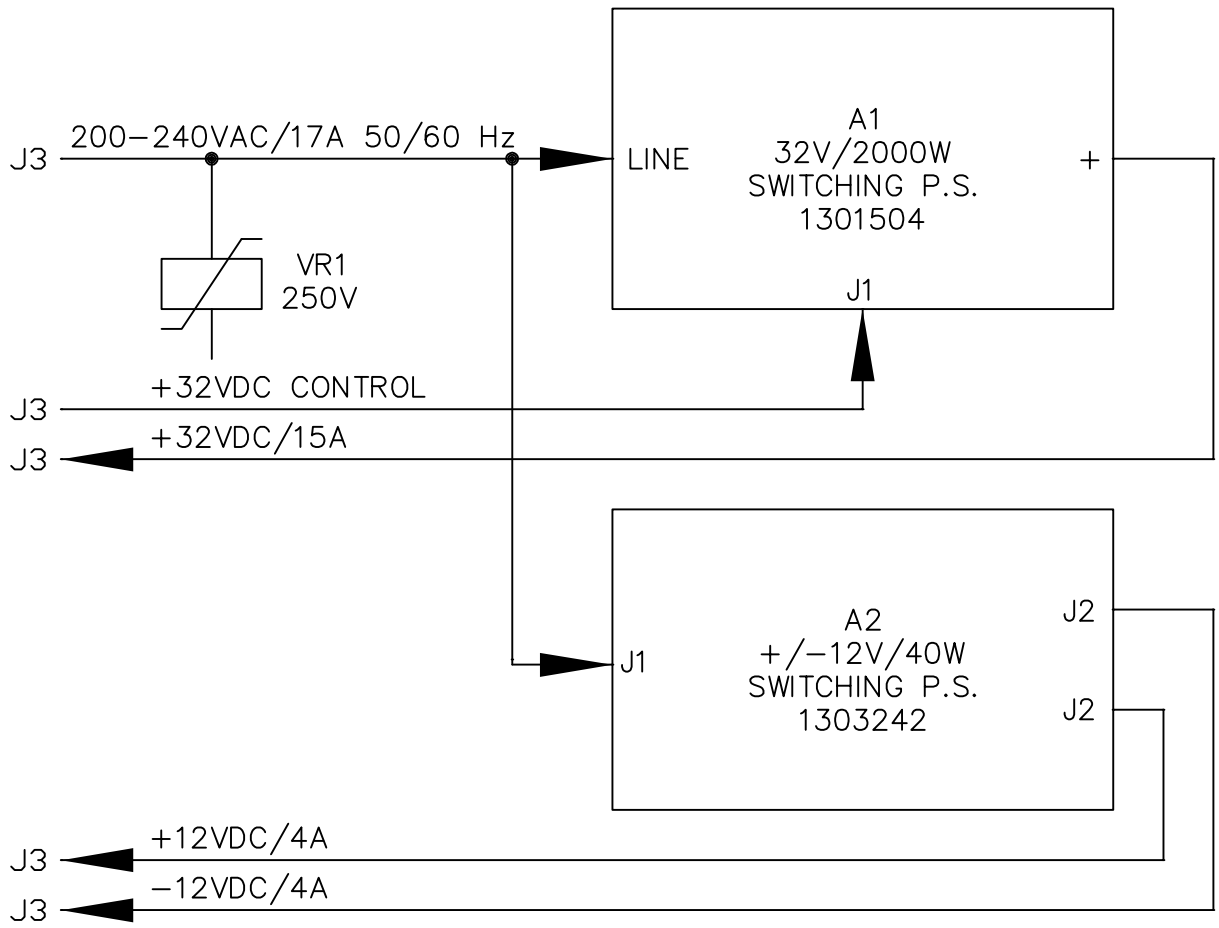

REV	ECO	DATE	APV

Axcera®

THIS PRINT IS THE PROPERTY OF AXCERA, IT SHALL NOT BE COPIED WITHOUT PERMISSION.

MATERIAL
– – – – –

FINISH
– – – – –

TITLE
B/D,
POWER SUPPLY ASSY,
1KW, INNOVATOR LX

DWN	RGE	1/27/04	DWG. NO. 1303886	REV A0
CHK	JCM	1/27/04		
REL	JCM	1/27/04	A SCALE – – –	SHEET 1 OF 1

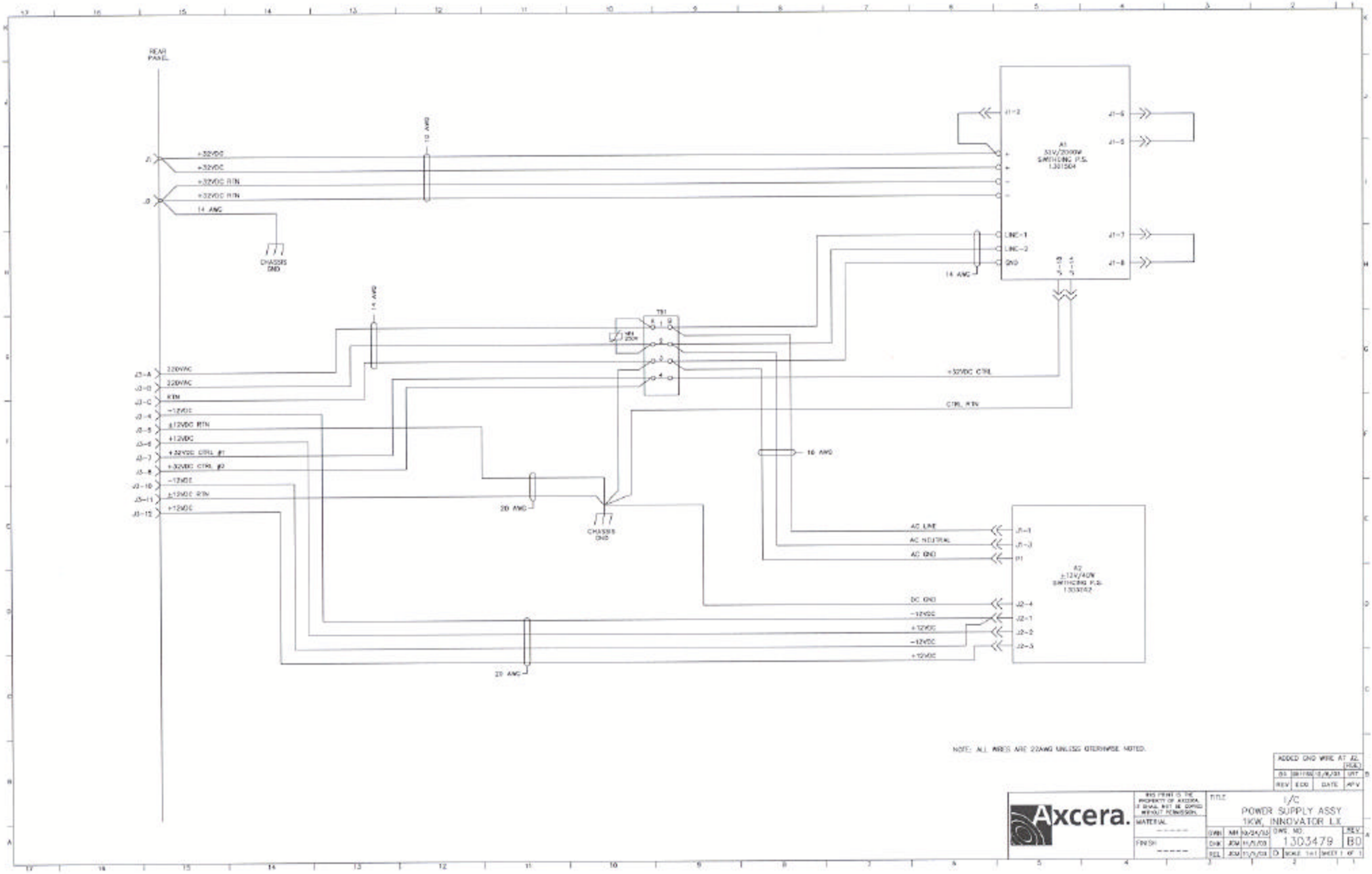

NOTE: ALL WIRES ARE 22AWG UNLESS OTERWISE NOTED.

REV	ECO	DATE	APV
05	081156	12/8/03	JRT

ADDED GND WIRE AT J2. (REAL)

Axcera.

THIS PRINT IS THE PROPERTY OF AXCERA. IT SHALL NOT BE COPIED WITHOUT PERMISSION.

MATERIAL ------

FINISH ------

TITLE I/C POWDR SUPPLY ASSY 1KW, INNOVATOR LX

DWN	MH	10/24/03	DWG. NO. 1303479
CHK	JCM	11/7/03	REV. B0
ENG	JCM	11/7/03	D SCALE 1=1 SHEET 1 OF 1

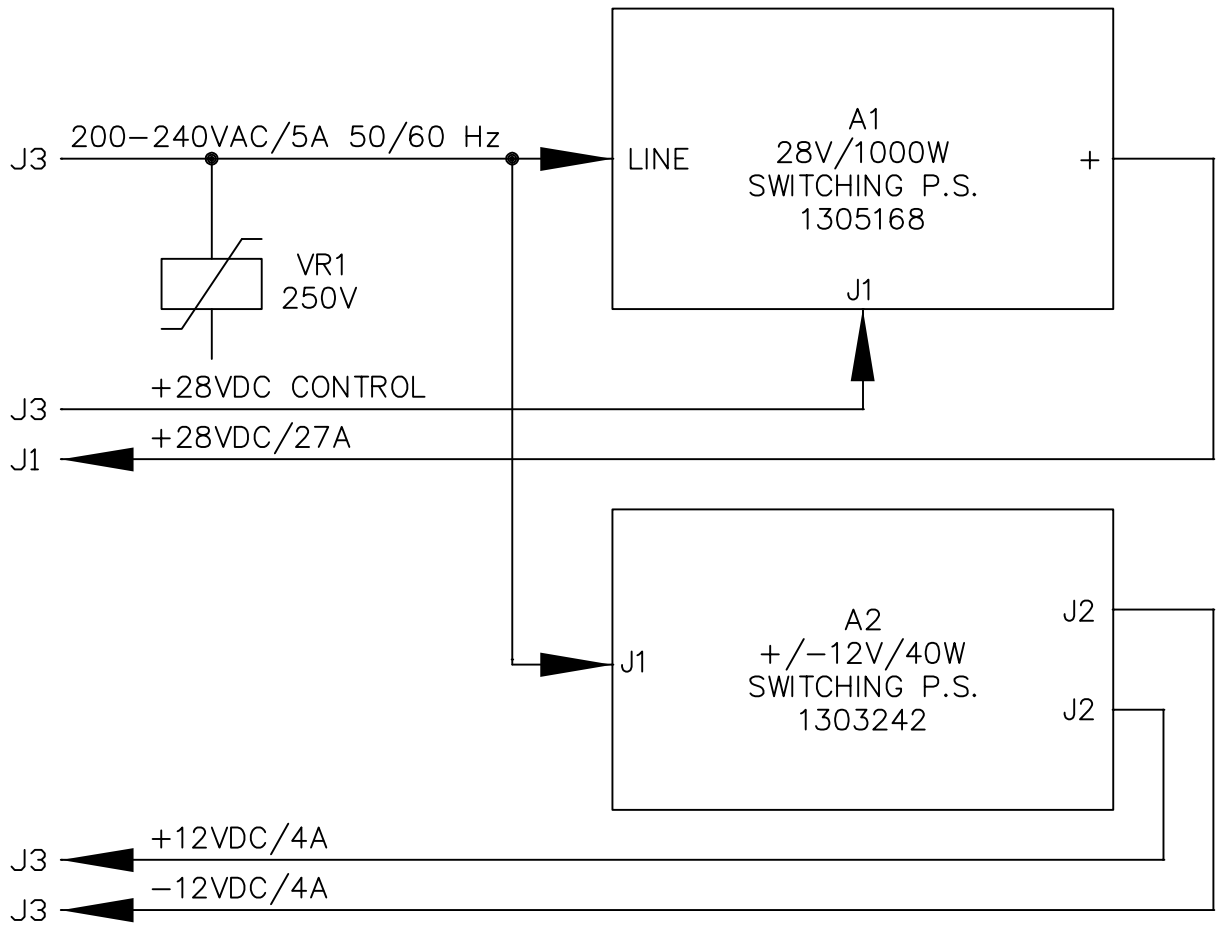

REV	ECO	DATE	APV

Axcera®

THIS PRINT IS THE PROPERTY OF AXCERA, IT SHALL NOT BE COPIED WITHOUT PERMISSION.

MATERIAL
– – – – –

FINISH
– – – – –

TITLE
B/D,
POWER SUPPLY ASSY,
1KW, 1.67 GHz

DWN	RGE	11/30/04	DWG. NO. 1305175	REV A0
CHK	LRT	12/09/04		
REL	LRT	12/09/04	A SCALE – – –	SHEET 1 OF 1

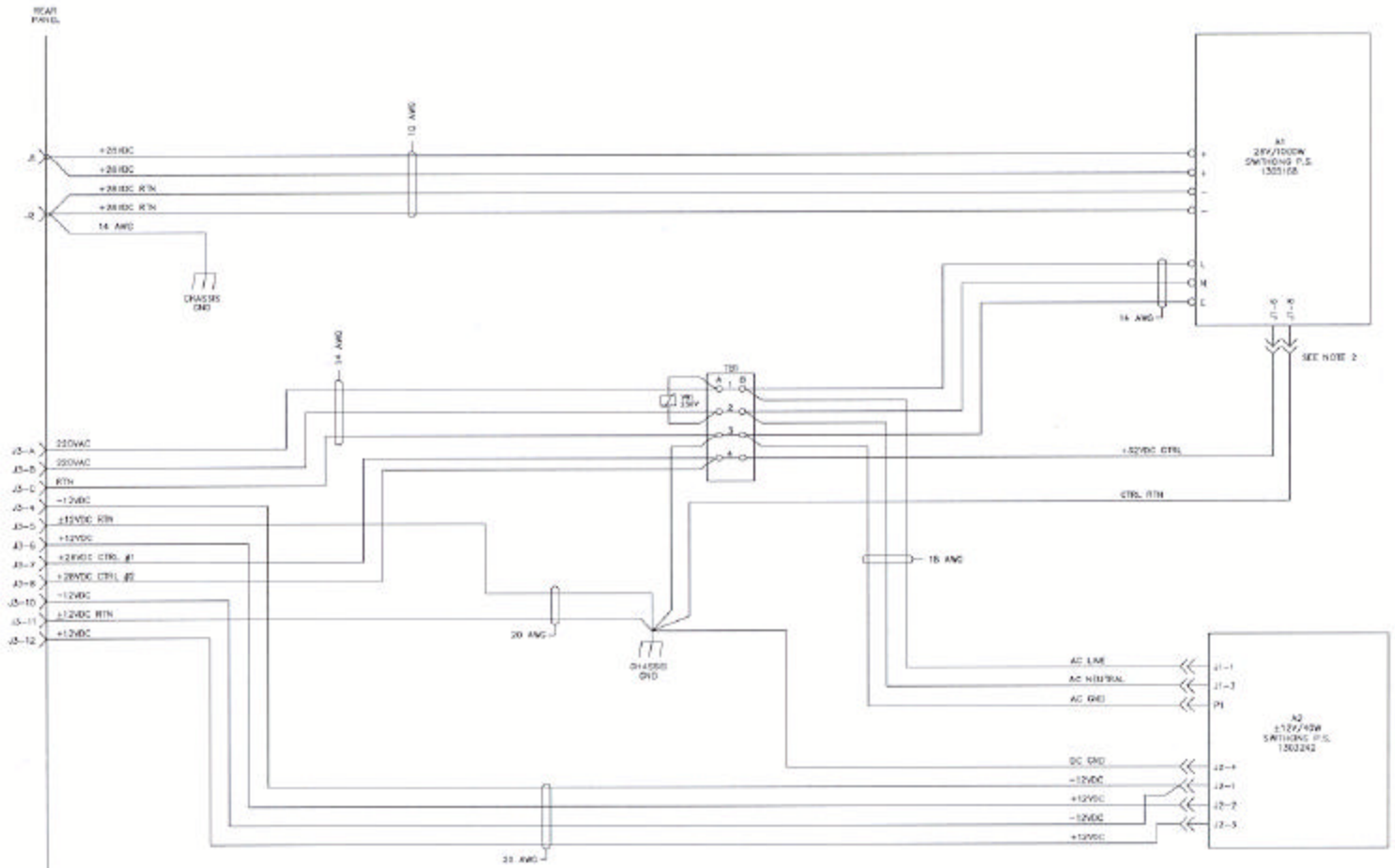

NOTES:
1.) ALL WIRES ARE 22AWG UNLESS OTHERWISE NOTED.
2.) USE J6 NEXT TO THE AC INPUT TERMINAL BLOCK.

ADDED NOTE 2				DAM
DR		9/21/04		JRT
REV	ECO	DATE		APV

Axcera.

THIS PRINT IS THE PROPERTY OF AXCERA, IT SHALL NOT BE COPIED WITHOUT PERMISSION

MATERIAL ------

FINISH ------

TITLE I/C POWER SUPPLY ASSY 1KW, 1.62 GHz

DWN	RGB	11/13/04	
CHK	JRT	12/06/04	
ECL	JRT	12/06/04	

DWG. NO. 1305176 REV B0

SCALE 1=1 SHEET 1 OF 1