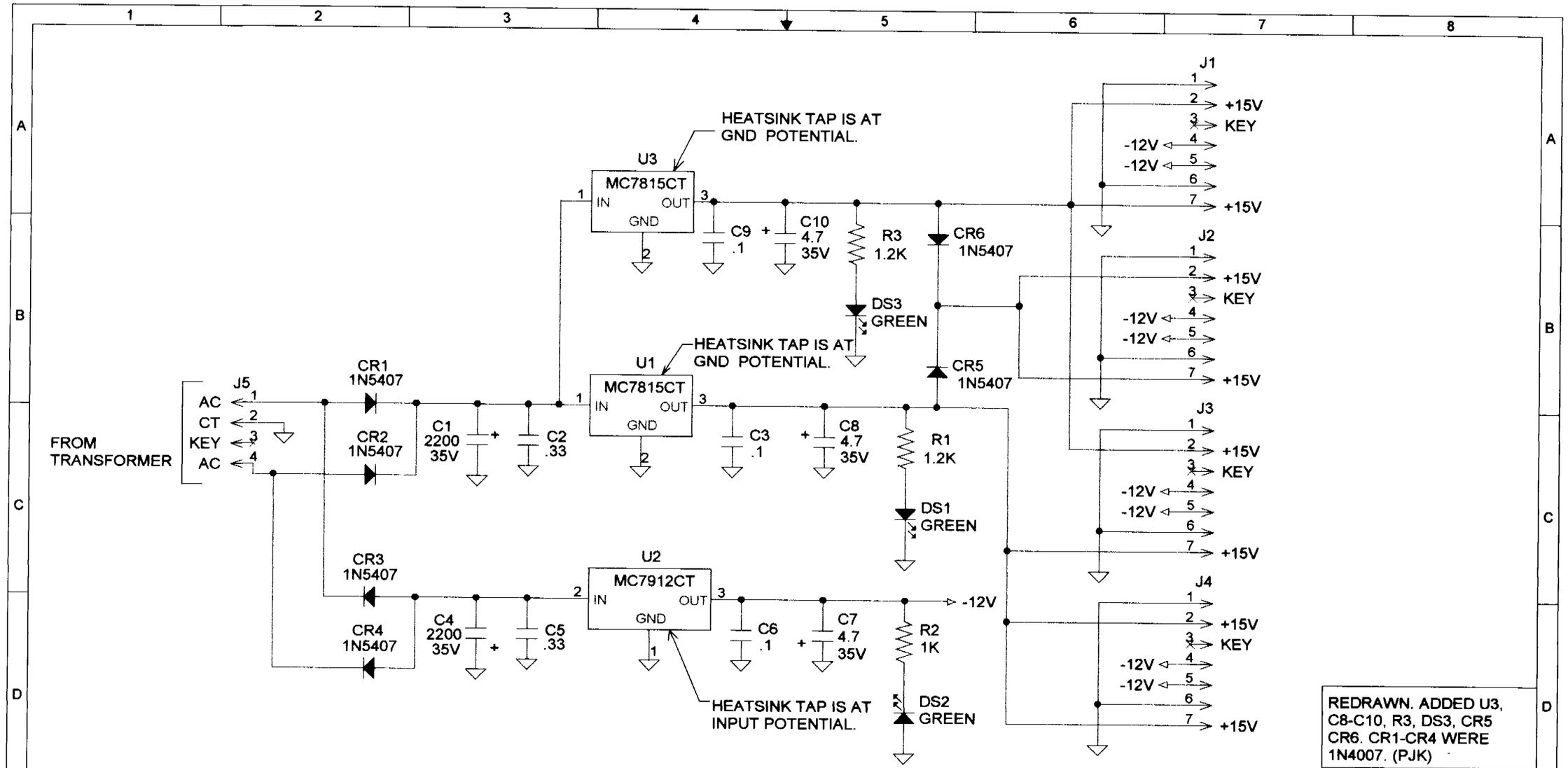

NOTES:
1) ALL CAPACITORS ARE uF UNLESS NOTED OTHERWISE.
2) ALL RESITORS ARE 1/4 WATT UNLESS NOTED OTHERWISE.

REDRAWN. ADDED U3, C8-C10, R3, DS3, CR5 CR6. CR1-CR4 WERE 1N4007. (PJK)

REV	ECN	DATE	APV
1	8085	6/18/96	JAG

ITS CORPORATION

THIS PRINT IS THE PROPERTY OF ITS CORP IT SHALL NOT BE COPIED WITHOUT PERMISSION

MATERIAL

FINISH

TITLE SCHEMATIC - +15V/-12V POWER SUPPLY BD. (1245-1203)

DWN	PJK	4/30/96	DWG. NO. 1245-3203	REV 1
CHK	JAG	5/16/96		
REL	JAG	5/16/96	B SCALE ---	SHEET 1 OF 1